# TEKTRONIX®

## 7B53A/7B53AN

## DUAL TIME BASE

## SERVICE

## INSTRUCTION MANUAL

Tektronix, Inc. • P.O. Box 500 • Beaverton, Oregon 97005 • Serial No. _____

070-1342-00

972

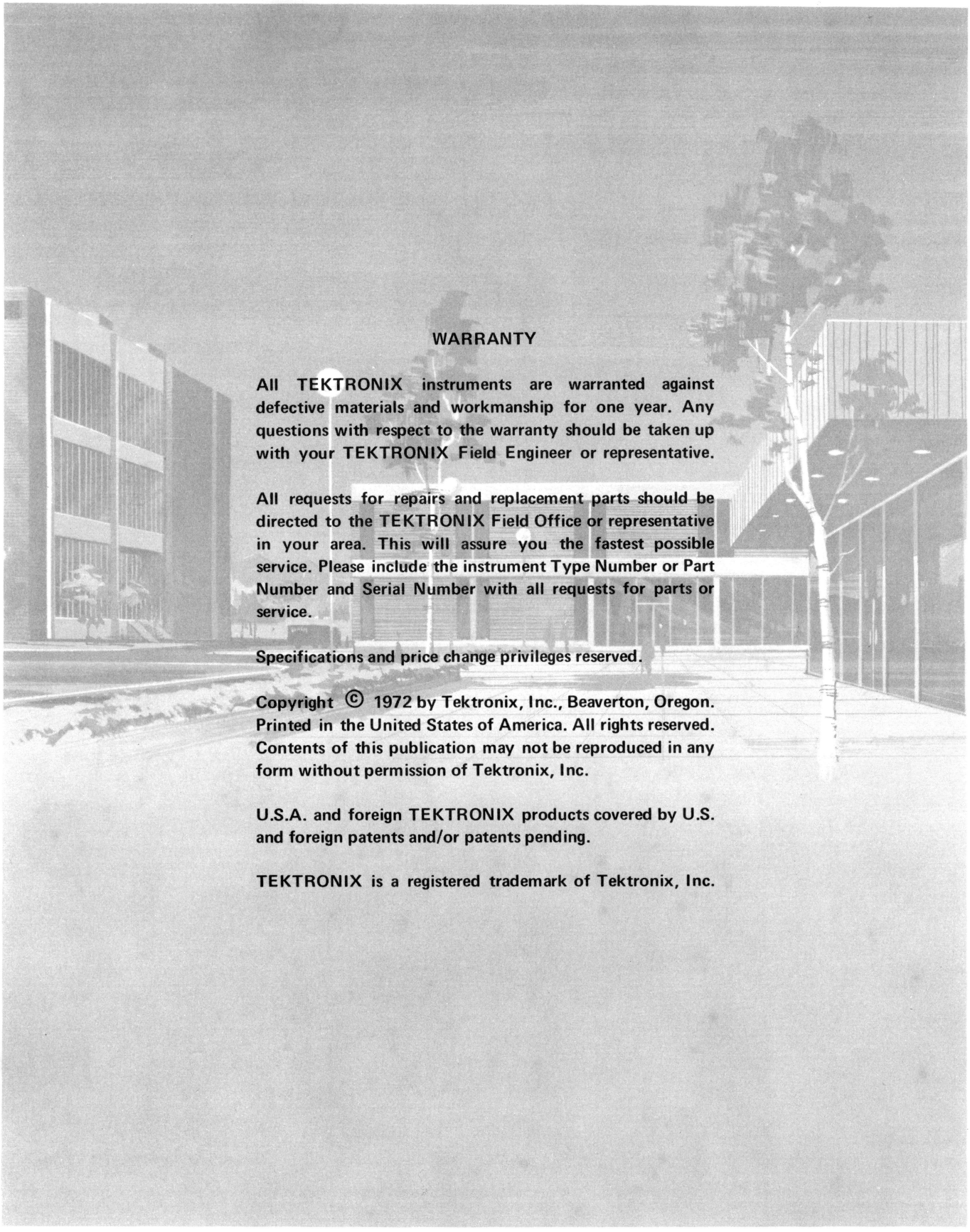

## WARRANTY

All TEKTRONIX instruments are warranted against defective materials and workmanship for one year. Any questions with respect to the warranty should be taken up with your TEKTRONIX Field Engineer or representative.

All requests for repairs and replacement parts should be directed to the TEKTRONIX Field Office or representative in your area. This will assure you the fastest possible service. Please include the instrument Type Number or Part Number and Serial Number with all requests for parts or service.

Specifications and price change privileges reserved.

Copyright © 1972 by Tektronix, Inc., Beaverton, Oregon. Printed in the United States of America. All rights reserved. Contents of this publication may not be reproduced in any form without permission of Tektronix, Inc.

U.S.A. and foreign TEKTRONIX products covered by U.S. and foreign patents and/or patents pending.

TEKTRONIX is a registered trademark of Tektronix, Inc.

# TABLE OF CONTENTS


| SECTION 1 | OPERATING INFORMATION | Page |
|---|---|---|
| | Introduction | 1-1 |
| | Controls and Connectors | 1-2 |
| | General | 1-2 |
| | Main Triggering Controls | 1-2 |
| | Sweep Controls | 1-2 |
| | Delay Time Control | 1-4 |
| | Delayed Triggering Controls | 1-4 |
| | Input/Output Connectors | 1-4 |

| SECTION 2 | CIRCUIT DESCRIPTION | |
|---|---|---|
| | Introduction | 2-1 |
| | Simplified Block Diagram Discussion | 2-1 |
| | Circuit Operation | 2-4 |
| | General | 2-4 |
| | Main Trigger Preamp | 2-4 |
| | Main Trigger Generator | 2-6 |
| | Main Sweep Generator | 2-8 |
| | Delayed Trigger Generator | 2-11 |
| | Delayed Sweep Generator | 2-12 |
| | Horizontal Preamp | 2-14 |

| SECTION 3 | MAINTENANCE | |
|---|---|---|
| | Introduction | 3-1 |
| | Preventive Maintenance | 3-1 |
| | Troubleshooting | 3-1 |
| | Corrective Maintenance | 3-3 |

| SECTION 4 | CALIBRATION | Page |
|---|---|---|
| | Introduction | 4-1 |
| | TEKTRONIX Field Service | 4-1 |
| | Using This Procedure | 4-1 |
| | Test Equipment Required | 4-1 |
| | Preliminary Control Settings | 4-3 |
| | Part I—Performance Check | 4-4 |
| | Introduction | 4-4 |
| | Index to Part I—Performance Check | 4-4 |
| | Preliminary Procedure for Performance Check | 4-4 |
| | Trigger System Check | 4-5 |
| | Horizontal System Check | 4-12 |
| | Output Signals Check | 4-19 |
| | Part II—Adjustment | 4-20 |
| | Introduction | 4-20 |
| | Index to Part II—Adjustment | 4-20 |
| | Preliminary Procedure for Adjustment | 4-20 |
| | Trigger System Adjustment | 4-21 |
| | Horizontal System Adjustment | 4-23 |

| SECTION 5 | ELECTRICAL PARTS LIST |
|---|---|

| SECTION 6 | DIAGRAMS AND CIRCUIT BOARD ILLUSTRATIONS |
|---|---|

| SECTION 7 | MECHANICAL PARTS LIST |
|---|---|

CHANGE INFORMATION


*NOTE*

*Refer to the 7B53A/7B53AN Operators manual for specifications and complete operating instructions.*

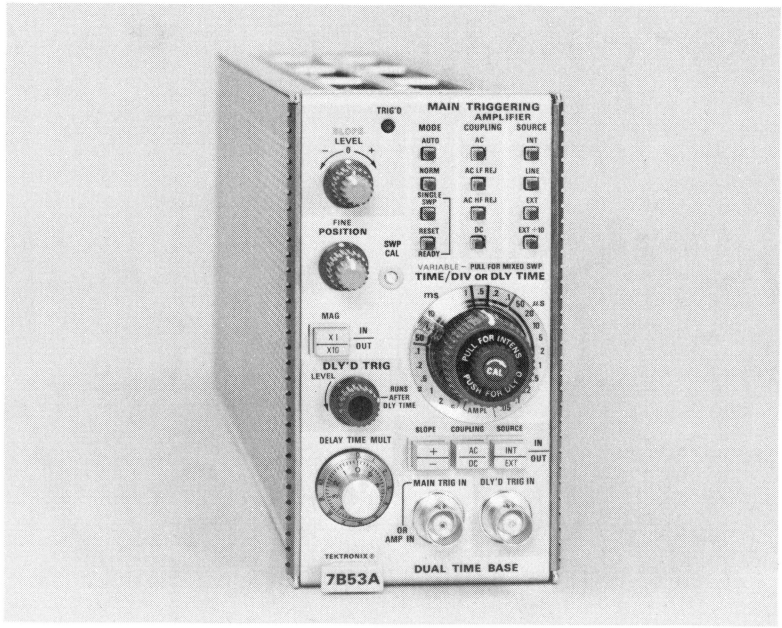


## 7B53A/7B53AN Features

The 7B53A and 7B53AN Dual Time Base units provide Main, Intensified, Delayed, and Mixed sweep operation for TEKTRONIX 7000-Series Oscilloscopes. Calibrated sweep rates from 5 s/DIV (5 nanoseconds with X10 magnification) and triggering to 100 megahertz are provided. The 7B53A and 7B53AN are electrically identical except that only the 7B53A is compatible with the alphanumeric readout system provided for 7000-Series Oscilloscopes.

Other features include 0 to 10 times continuous sweep delay, variable main and delayed sweep rates, and variable main sweep holdoff. Separate triggering controls are provided for main and delayed sweep triggering, and when operating in the AUTO MAIN TRIGGERING MODE, a bright base line is displayed in the absence of a trigger signal. The 7B53A/7B53AN can also be used as an amplifier for X-Y operation.

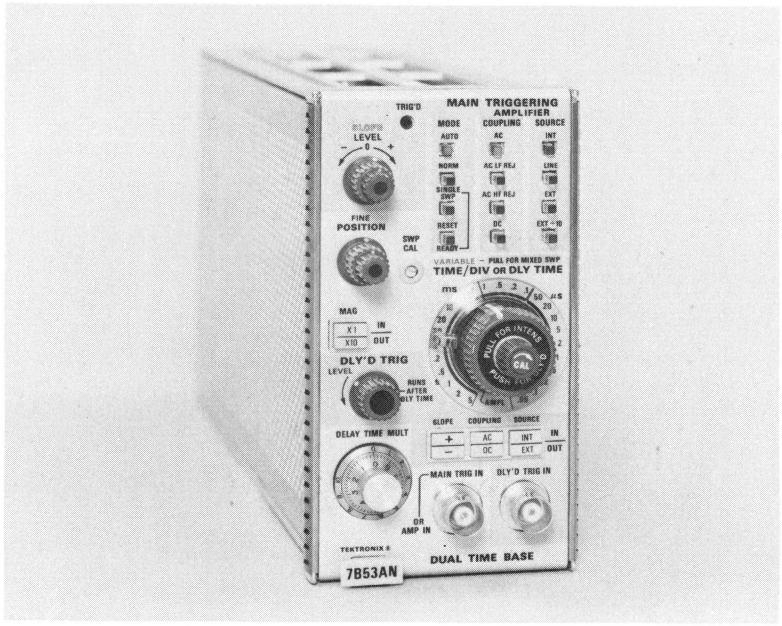


**Fig. 1-1. 7B53A/7B53AN Dual Time Base Units.**

# OPERATING INFORMATION

Brief operating information is given in this section, for more detailed instructions, refer to the 7B53A/7B53AN Operators Manual.

Before operating the 7B53A/7B53AN it is necessary to check the settings of the Variable Selector multi-pin connector (P140) and the Delayed Sweep Gate Out multi-pin connector (P613). The Variable Selector multi-pin connector (P140) determines whether the front-panel VARIABLE control varies main sweep rates, delayed sweep rates, or the main sweep holdoff. The Delayed Sweep Gate Out multi-pin connector (P613) determines whether or not the Delayed Sweep Gate out signal is connected to the front-panel DLY'D TRIG IN connector. Refer to VARIABLE control and Delayed Sweep Gate out information in this section for additional instructions.

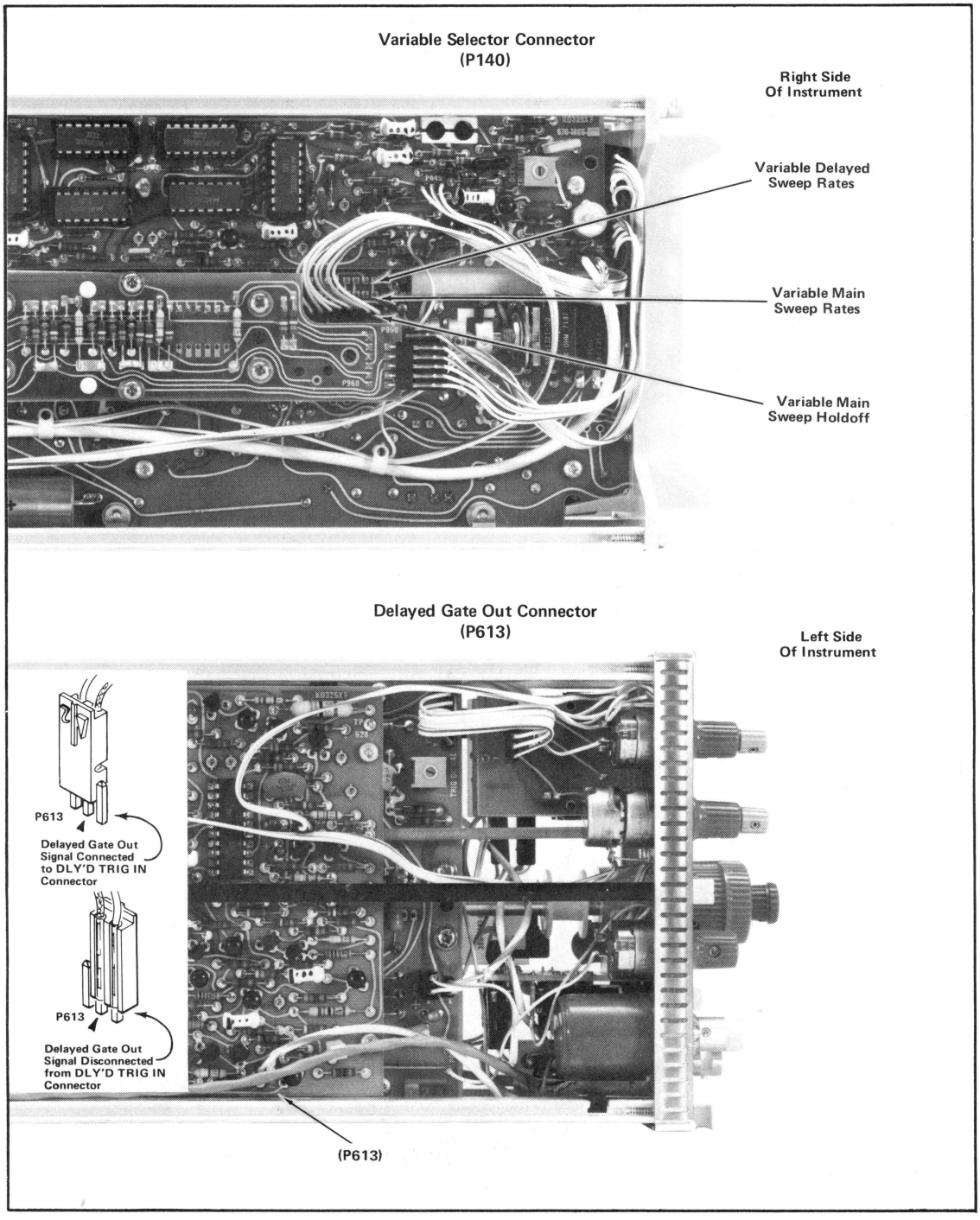


Fig. 1-2. Location of Delayed Sweep Gate Out and Variable Selector multi-pin connectors.

## CONTROLS AND CONNECTORS

### General

All controls required for the operation of the 7B53A/7B53AN, except the Variable Selector and the Dly'd Sweep Gate Out connector (see Fig. 1-2), are located on the front panel of the instrument. To make full use of the capabilities of this instrument, the operator should be familiar with the function and use of each control. A brief description of the front-panel controls and connectors is given here. More detailed information is given under General Operating Information in the 7B53A/7B53AN Operators Manual. Fig. 1-3 shows the front panel and external controls and connectors of the 7B53A/7B53AN.

### (1.) Main Triggering Controls

**LEVEL.** Selects the amplitude point on the trigger signal where sweep triggering occurs.

**SLOPE.** Two-position switch permits triggering on the positive-going or negative-going portion of the main triggering signal.

**TRIG'D.** Light indicates that the main sweep is triggered and will produce a display.

**MODE.** Pushbutton switches select the operating mode for the main triggering circuits.

**COUPLING.** Pushbutton switches select the method of coupling the triggering signal to the main triggering circuits.

**SOURCE.** Pushbutton switches select the source of the main triggering signal.

### (2.) Sweep Controls

**TIME/DIV OR DLY TIME.** Selects the sweep rate of the main sweep generator (see Fig. 1-4).

**DLY'D Time/Division.** Selects the sweep rate of the delayed sweep generator and selects the MAIN SWP, INTEN, and DLY'D SWP Display Modes (see Fig. 1-4).

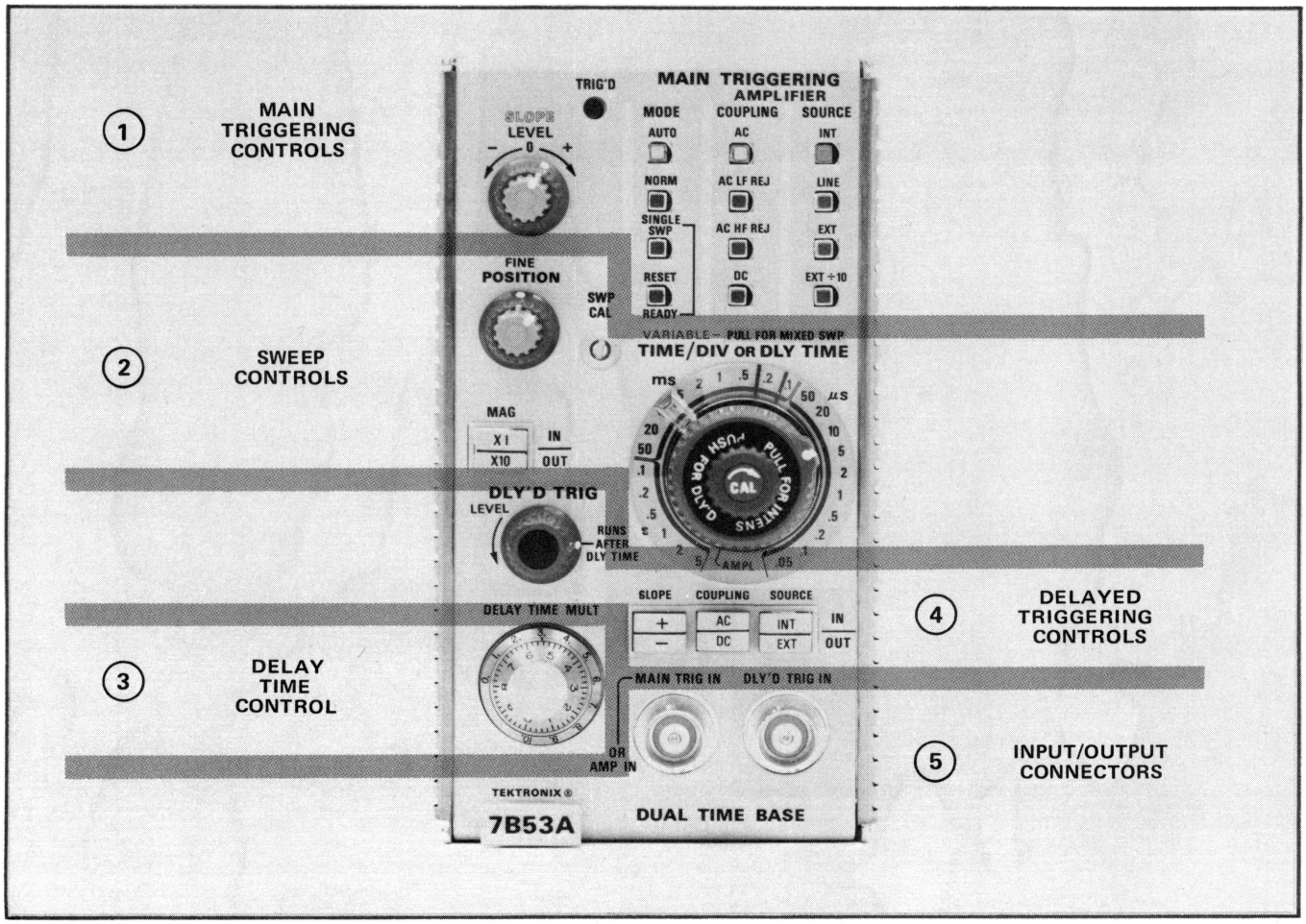


Fig. 1-3. Front-panel controls and connectors.

**VARIABLE.** Combination switch and control provides variable main sweep rates, variable delayed sweep rates, or variable main sweep holdoff: depending on the connection of the multi-pin connector P140 (internal). The VARIABLE control may also be pulled outward to select the MIXED Display Mode, when operating in the DLY'D SWP Display Mode, see Fig. 1-4.

Variable Sweep Rates: Variable sweep rates for the main or delayed sweep generators may be obtained when P140 is properly connected, see Fig. 1-2. When the front-panel VARIABLE control is rotated out of the detent position, the VARIABLE control is activated for variable sweep rates (uncalibrated).

Variable Holdoff: Variable main sweep holdoff can be obtained when P140 is connected for this function, see Fig. 1-2. When the VARIABLE control is rotated out of the detent position, the holdoff duration may be varied. Variable holdoff is used to provide a stable display of repetitive complex waveforms.

**Display Mode.** Four display modes can be selected by the following switch settings:

MAIN SWP: The MAIN SWP mode (non-delayed) is selected when the TIME/DIV OR DLY TIME switch and the DLY'D Time/Division switch are locked together at the same sweep rate.

INTEN: The INTEN mode, a function of the main and delayed sweeps, is selected when the DLY'D Time/Division switch is pulled out. In this mode, a portion of the main sweep is intensified during the time that the delayed sweep runs.

DLY'D SWP: The DLY'D SWP mode is selected when the DLY'D Time/Division switch is pulled out, rotated in the INTEN mode for the desired delayed sweep rate, and then pushed in. In this mode, the delayed sweep is displayed at a rate determined by the DLY'D Time/Division switch at the end of each delay period, as determined by TIME/DIV OR DLY TIME switch and the DELAY TIME MULT dial settings.

MIXED: The MIXED mode is selected when the DLY'D SWP mode is selected and the VARIABLE knob is pulled out. In the MIXED mode, the main sweep is displayed on the CRT to a point determined by the DELAY TIME MULT dial; the remainder of the sweep is at the rate determined by the delayed sweep.

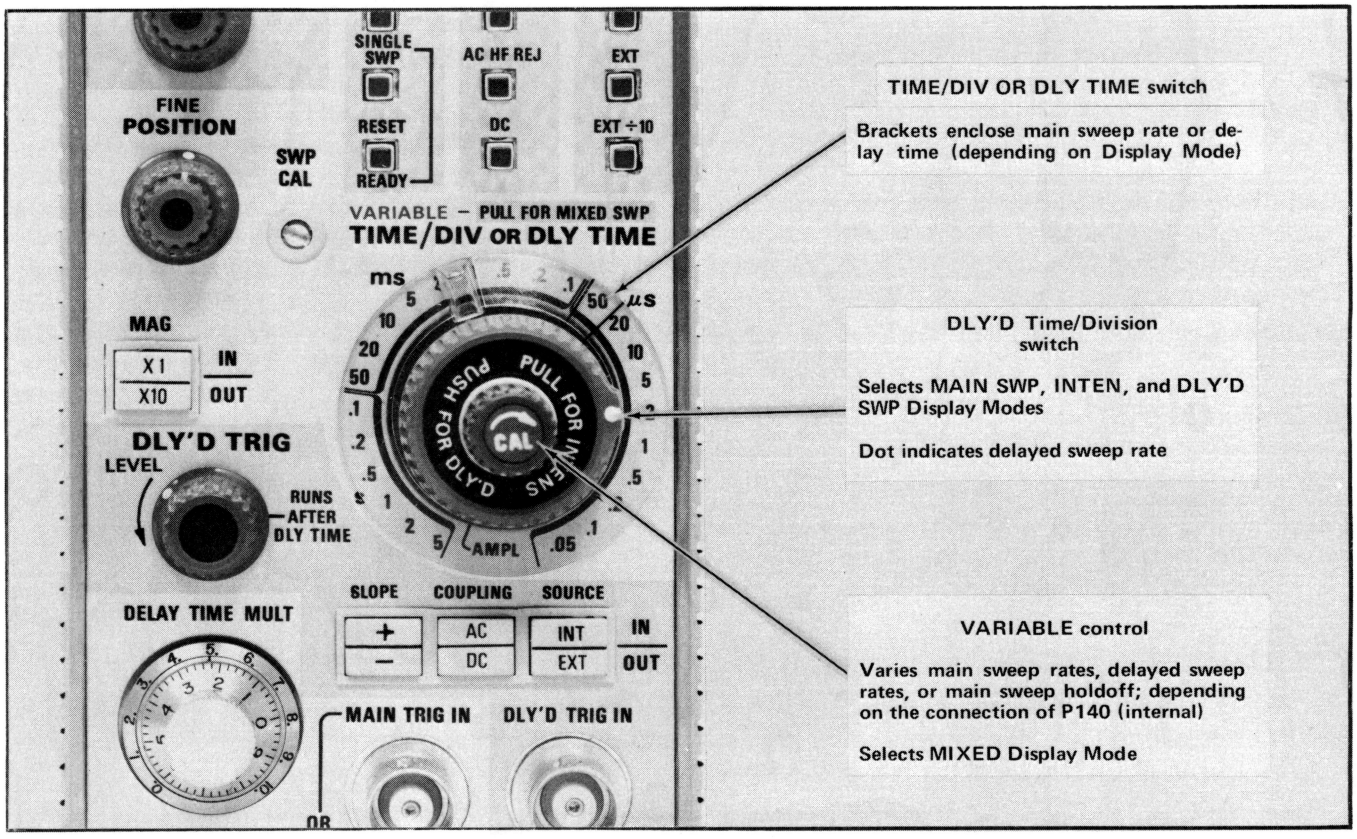


**Fig. 1-4. Composite Time/Division switch.**

**SWP CAL.** Screwdriver adjustment to match the gain of the 7B53A/7B53AN to the indicator oscilloscope for calibrated sweep rates.

**POSITION.** Controls horizontal position of display.

**FINE.** Provides precise control of horizontal position adjustment.

**MAG.** Pushbutton switch selects X1 or X10 horizontal magnification.

## (3.) Delay Time Control

**DELAY TIME MULT.** Provides variable sweep delay between 0.00 and 10.0 times the delay time indicated by the TIME/DIV OR DLY TIME switch.

## (4.) Delayed Triggering Controls

**LEVEL.** Selects the RUNS AFTER DLY TIME or Triggerable After Dly Time Modes, and the amplitude point at which the delayed sweep is triggered.

**SLOPE.** Two-position switch permits triggering on the positive-going or negative-going portion of the delayed triggering signal.

**COUPLING.** Two-position switch selects the method of coupling the triggering signal to the delayed triggering circuits.

**SOURCE.** Two-position switch to select the source of the delayed triggering signal.

## (5.) Input/Output Connectors

**MAIN TRIG IN OR AMP IN.** Front-panel BNC connector serves two different input functions.

MAIN TRIG IN: External trigger input for the main triggering circuit. The SOURCE switch for MAIN TRIGGERING must be set to EXT or EXT ÷10 and the TIME/DIV or DLY'D TIME switch set to any position except AMPL.

AMPL: When the TIME/DIV OR DLY'D TIME switch is set to AMPL and the MAIN TRIGGERING SOURCE switch is set to the EXT or EXT ÷10 position, this connector serves as an External Horizontal Input.

**DLY'D TRIG IN.** Front-panel BNC connector serves two input functions.

DLY'D TRIG IN: When the Delayed Triggering SOURCE switch is set to EXT, this connector serves as an external trigger input for the delayed triggering circuit.

Delayed Sweep Gate Out: When the DLY'D TRIG SOURCE switch is set to INT, P613 is properly connected (see Fig. 1-2), and the delayed sweep generator is running (INTEN, DLY'D SWP, or MIXED Display Mode) the DLY'D TRIG IN connector serves as a Delayed Sweep Gate Output. The Delayed Sweep Gate signal is a rectangular positive-going pulse with approximately 3.0 volts amplitude and pulse width coincident with the delayed sweep.

# CIRCUIT DESCRIPTION

## Introduction

This section of the manual contains a description of the circuitry used in the 7B53A/7B53AN Dual Time Base. The description begins with a discussion of the major circuit functions using a simplified block diagram.

### SIMPLIFIED BLOCK DIAGRAM

The Simplified Block Diagram, Fig. 2-1, shows interconnection of the basic circuit blocks in the 7B53A/7B53AN. In some cases, such as the Main Sweep Trigger, the block includes a number of separate circuits. The individual circuits are discussed in detail later in this section.

## Main Sweep Mode

When the TIME/DIV OR DLY TIME switch is set to select MAIN SWP, operation is as follows:

**Main Sweep Trigger.** This block includes circuitry for selecting the trigger source, type of coupling, triggering mode, and point on the trigger signal where triggering occurs. Also, regardless of the trigger signal shape or amplitude (within specification), this circuitry provides a fast-rise, uniform-amplitude pulse to the Main Sweep Start Comparator. Termination of the pulse (or gate) occurs at the rise of Main Sweep Holdoff.

**Main Sweep Start Comparator.** This circuit is activated by the positive gate from the Main Sweep Trigger. The output signal coupled to the Main Sawtooth Generator is a positive gate with the same duration as the sweep. This gate is also coupled to the Sweep Gate Out. A negative-going gate (coincident with the positive gate) is coupled to the Delayed Sweep Lockout Multi and the Delayed Sweep Start Control.

**Main Sawtooth Generator.** The main sweep signal is developed by the Main Sawtooth Generator. When a positive gate from the Main Sweep Start Comparator is applied, a sawtooth waveform is generated. The sawtooth duration is determined by the positive gate duration. Rate of change of the sawtooth is set by Ct and Rt, selected by the TIME/DIV switch.

**Sweep Stop Comparator.** One side of this comparator is driven by the main sweep sawtooth signal, and the other side is set by the Main Swp Stop adjustment. When the sawtooth waveform passes through the setting of the Main Swp Stop adjustment, the output of the Sweep Stop Comparator switches to a positive level. This positive step is applied to the Main Sweep Holdoff.

**Main Sweep Holdoff.** This circuit develops a gate which is used to prevent generation of a trigger signal until the sweep circuits have stabilized after a sweep. The positive step from the Sweep Stop Comparator initiates the positive holdoff gate. The duration of the hold off gate is variable, depending on the setting of the TIME/DIV OR DLY TIME switch. Holdoff timing capacitors are separate from sweep timing capacitors. Holdoff is longer for slower sweep rates.

Output from the Main Sweep Holdoff is coupled to the Main Sweep Trigger and the Delayed Sweep Holdoff circuit. A trigger signal cannot be generated during the holdoff interval. The holdoff serves to reset the trigger circuits so that they are ready to receive an input trigger signal after holdoff.

**Horiz Output.** The Horiz Output block includes the Ext Horiz Amp, Position Amp, Horiz Display Selector, and Horiz Out Amp circuits.

With the TIME/DIV OR DLY TIME switch set for main sweep, this circuit selects the signal from the Main Sawtooth Generator, amplifies the signal, and converts the single-ended input to a push-pull output signal. DC positioning level is also applied to this block.

## Delayed Sweep Mode

To generate the delayed sweep, the Main Sawtooth Generator must first be gated on (see Main Sweep Mode).

**Delay Pickoff.** This circuit supplies a positive gate which starts when the main sawtooth signal passes through the level selected by the DELAY TIME MULT control. The gate ends with the main sawtooth signal. The output signal is coupled to the Delayed Sweep Holdoff circuitry.

**Delayed Sweep Trigger.** When the DLY'D TRIG LEVEL is set to RUNS AFTER DLY TIME (into switch detent), the output trigger is generated as soon as the delayed gate is applied. If the DLY'D TRIG LEVEL control is in the triggerable mode (out of switch detent), the output trigger is initiated by the next input trigger that occurs after the Delay Gate is applied.

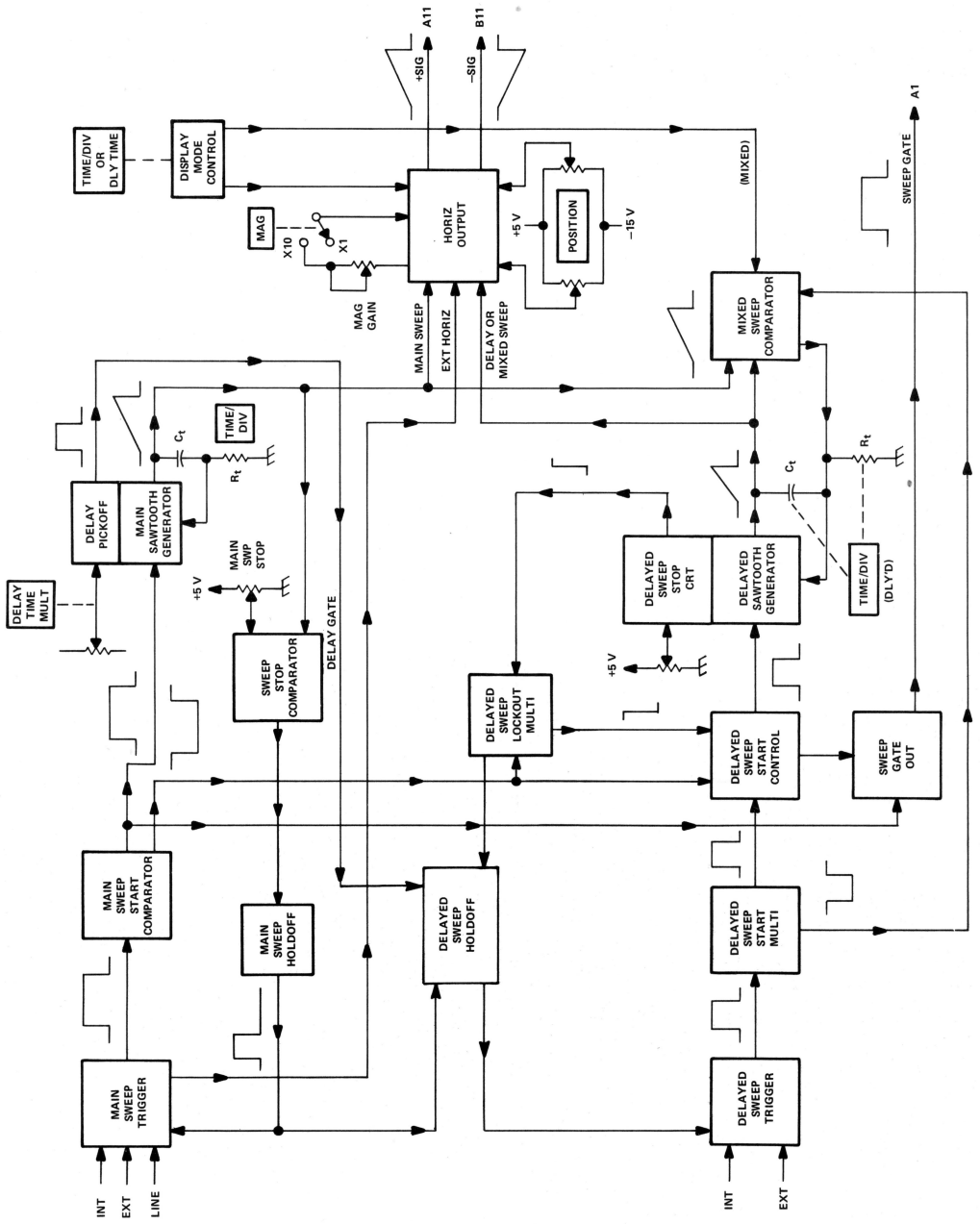


Fig. 2-1. 7B53A/7B53AN Simplified Block Diagram.

The Delayed Sweep Trigger output is a positive gate which is terminated by the Holdoff signal or the positive step from the Delayed Sweep Stop circuit. The positive output gate is coupled to the Delayed Sweep Start Multi.

**Delayed Sweep Start Multi.** The signal from the Delayed Sweep Trigger causes the Delayed Sweep Start Multi to flip so that a positive gate is coupled to the Delayed Sweep Start Control, and a negative gate is applied to the Mixed Sweep Comparator. The output gates are the same in duration as the positive gate from the Delayed Sweep Trigger.

**Delayed Sweep Start Control.** For delayed sweep mode of operation the Delayed Sweep Start Control serves to couple the positive gate from the Delayed Sweep Start Multi to the Delayed Sawtooth Generator and the Sweep Gate Out.

Input signals from the Main Sweep Start Comparator and the Delayed Sweep Lockout Multi are not effective in this mode.

**Delayed Sawtooth Generator.** The delayed sweep signal is developed by the Delayed Sawtooth Generator. The sawtooth is generated during the time that a positive gate is applied from the Delayed Sweep Start Control. Rate of change of the sawtooth is set by Ct and Rt, selected by the TIME/DIV (Dly'd) switch.

The sawtooth output signal is coupled to the Mixed Sweep Comparator and the Horiz Output circuits.

**Delayed Sweep Stop Circuit.** A positive step occurs at the output of the Delayed Sweep Stop circuit when the delayed sawtooth passes through the level selected by the Dly'd Swp Length adjustment. This step is coupled to the Delayed Sweep Trigger and the Delayed Sweep Lockout Multi.

## Mixed Sweep Mode

In this mode of operation, the sweep is first running at the main sweep rate and then, after the selected delay interval, runs at the delayed sweep rate. The main sweep and delayed sweep are initiated as previously described. Operation of other circuit blocks follows.

**Mixed Sweep Comparator.** This circuit determines whether the delayed sweep generator runs at the main sweep rate or at the delayed sweep rate. Before the delay gate is generated (delay gate generated at delay pickoff as determined by the setting of the DELAY TIME MULT dial) the main sweep sawtooth signal is coupled through the Mixed Sweep Comparator, causing the delayed sweep generator to run at the main sweep rate. The resulting sawtooth signal is coupled to the Horizontal Output stage.

When a positive gate from the Delayed Sweep Trigger is applied to the Delayed Sweep Start Multi (at Delay Pickoff as determined by the DELAY TIME MULT dial setting) a negative gate is generated and coupled to the Mixed Sweep Comparator. This opens the Mixed Sweep Comparator, preventing the Delayed Sweep Generator from running at the main sweep rate. Simultaneously, the Delayed Sweep Generator is released to run at the delayed sweep rate.

**Delayed Sweep Lockout Multi.** The positive step from the Delayed Sweep Stop circuit is inverted by the Delayed Sweep Lockout Multi and coupled to the Delayed Sweep Start Control, thus turning off the Delayed Sawtooth Generator.

**Sweep Gate Out.** Depending on the selection of the TIME/DIV switch, this stage couples the positive gate from either the Main Sweep Start Multi or the Delayed Sweep Start Control to connector A1. The Sweep Gate signal serves to unblank the CRT in the Oscilloscope during the sweep.

## External Horiz Input

When the TIME/DIV switch is set to AMPL, part of the Main Sweep Trigger circuitry becomes the Horiz Input Amp. An external signal connected to the MAIN TRIG IN or AMPL input is amplified and then coupled to the Horiz Output stage. The main and delayed sawtooth generators are disabled to prevent intensity modulation of the CRT trace by the unblanking waveforms.

## CIRCUIT OPERATION

### General

This section provides a detailed description of the electrical operation and relationship of the circuits in the 7B53A/7B53AN. The theory of operation for circuits unique to this instrument is described in detail in this discussion. Circuits which are commonly used in the electronics industry are not described in detail. If more information is desired in these commonly used circuits, refer to the following text-books.

Phillip Cutler, "Semiconductor Circuit Analysis", McGraw-Hill, New York, 1964.

Lloyd P. Hunter (Ed.), "Handbook of Semiconductor Electronics", second edition, McGraw-Hill, New York, 1962.

Jacob Millman and Herbert Taub, "Pulse, Digital, and Switching Waveforms", McGraw-Hill, New York, 1965.

The main headings in this circuit analysis refer to schematics in the diagrams section with the same name. The sub-headings indicate the individual circuit being described.

## MAIN TRIGGER PREAMP ◇1

The Main Trigger Preamp converts the push-pull internal trigger signal to a single-ended signal and selects the main trigger source and coupling for the Main Trigger Generator. Fig. 2-2 shows a detailed block diagram of the Main Trigger Preamp. The schematic of this circuit is shown on diagram 1 at the rear of this manual.

**Trigger Preamp.** The push-pull trigger signal from the Vertical Deflection System is converted to a single-ended output by the emitter-coupled stage, Q52-Q61. The output of Q61 drives current gain stage Q66-Q70. The DC level of the output is set by internal Trig DC Bal control, R72.

**Input Switching.** The MAIN TRIGGERING SOURCE switch, S10, selects the source of the trigger signal. Three trigger sources are available; internal, line, and external. The external signal may also be passed through a ÷ 10 attenuator network.

The MAIN TRIGGERING COUPLING switch, S20, offers a means of attenuating high or low frequency components of the trigger signal. In addition to AC and DC coupling, C23-R23 can be selected to provide low-frequency attenuation and R25-C25-C26 for high-frequency attenuation.

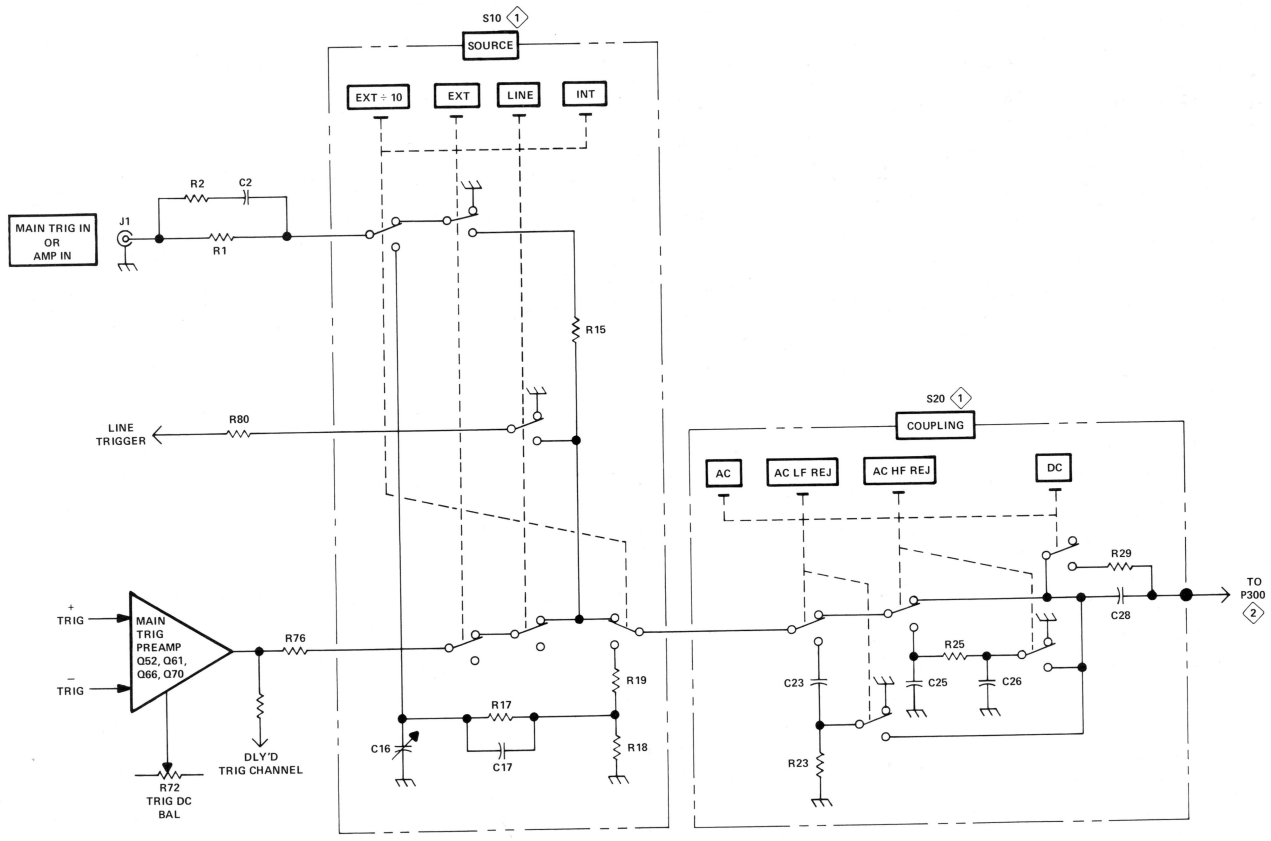


Fig. 2-2. Trigger Preamp and Input Switching Block Diagram.

## MAIN TRIGGER GENERATOR ◇2

The Main Trigger Generator provides selection of the level and slope where triggering occurs, and supplies a fast-rise pulse to the main sweep start comparator. Fig. 2-3 shows a detailed block diagram of the Main Trigger Generator; the schematic of this circuit is shown on diagram 2 at the rear of this manual.

**Input Stage.** The input source-follower, Q310, provides a high input impedance for the trigger signal. It also provides isolation between the Main Trigger Generator and the input source. Input protection diode, CR307 protects Q310 from excessive input signals by clamping the gate of the input FET if the input exceeds about −15 volts. The signal at the source of Q310 is passing through emitter-follower Q315 to the base of Q320 in the Slope Comparator, and to the External Horizontal circuit.

**Slope Comparator.** Q320 and Q322 are connected as a difference amplifier to provide selection of the slope and level at which the sweep is triggered. The reference voltage for the comparator is provided by the LEVEL control, R4, and the Main Trig Level Center control, R333. R333 sets the level at the base of Q322 so that the display is triggered at the 0 volt DC level of the incoming trigger when the LEVEL control is centered. When the MAIN TRIGGERING LEVEL control R4 is set to midrange the base of Q322 is at approximately 0 volts. This corresponds to the 0 volt level at the input of Q320, thus switching the comparator at the 0 volt level of the trigger signal. As the LEVEL control is turned clockwise, the voltage level on the base of Q322 becomes more positive. Now the trigger signal must rise to a more positive level before comparison takes place. The resultant CRT display starts at a more positive point on the displayed signal. When the LEVEL control is turned counterclockwise from 0, the result is the opposite of the above reaction and produces a CRT display which starts at a more negative point along the + slope of the trigger signal.

R326 establishes the emitter current for Q320 and Q322. The transistor with the most positive base, controls conduction of the comparator. For example, assume that the trigger signal from the input stage is positive-going and Q320 is forward-biased. The increased current flow through R326 makes the emitter of Q322 more positive and since the base is held constant by the level control voltage, the current through Q322 decreases. The increased current through Q320 makes the voltage at pin 4 of U350A less positive, and the decrease in current through Q322 makes voltage at pin 10 of U350C more positive. Notice that the signal currents at the collectors of Q320 and Q322 are opposite in phase. The sweep can be triggered from either the positive or negative edge of the input signal. The selection is made by the SLOPE switch S4.

When SLOPE switch S4 is set to +, the voltage between R347 and R346 decreases and activates U350A by providing a low voltage level at pin 5 of U350A. A low level is also applied to pins 6 and 7 of U350B. The low level is inverted by U350B and this high level is applied to pin 11 of U350C. Thus, pin 14 of U350C goes low, as does pin 13 of U350D. Since pin 11 of U350C is high, pin 10 of U350C has no effect. If pin 4 of U350A goes low, pin 2 goes high. Pin 12 of U350D also goes high causing pin 9 of U350D to go high, and the output at pin 3 of inverter U355B to go low. However, if pin 4 of U350A goes high, the process reverses and the output at pin 3 of U355B also goes high. Thus, pin 3 of U355B follows the input at pin 4 of U350A.

When the SLOPE switch S4 is set to −, +5 volts is applied to pin 5 of U350A. Pin 2 goes low, as does pin 12 of U350D. Pin 12 is held low, regardless of what happens at pin 4 of U350A. The +5 volts at pin 5 of U350A is inverted by U350B, which makes pin 11 of U350C go low. Pin 3 of U355B now follows the signal at pin 10 of U350C.

R341, R339, and CR340, (between pin 3 of U355B and pin 4 of U350A), provide regenerative feedback. R343, R342, and CR343 provide regenerative feedback to pin 10 of U350C.

In the reset condition, pin 15 of U375B is low, as is pin 12 of U355D. When a negative pulse is applied to pin 4 of U350A, pin 3 of U355B goes low as well as pin 13 of U355D. Thus, pin 15 of U355D goes high, which sets pin 2 of U375A to the high state and provides the sweep gate output (trigger pulse) through Q382 and pin C to the Main Sweep Start Comparator. At the end of sweep, the positive-going holdoff pulse is coupled to the Sweep Gate Reset circuit through pin B. The high level at the base of Q366 turns it on, causing pin 4 and 5 of U355A to go low coincident with the holdoff pulse. Therefore, pin 2 of inverter U355A goes high, resetting U375A. Pin 2 of U375A goes low, thus terminating the sweep gate.

The high at pin 2 of U355A sets U375B, causing pin 12 of U355D to go high, locking out any trigger pulse during the holdoff period. While pin 12 of U355D is high, pin 15 of U355D will stay low regardless of the state of pin 13 of U355D.

The Trigger Lockout Latch (U375B) can only be reset when the Trig'd Sweep Gate Latch (U375A) is in the reset condition (pin 2 of U375A low, pin 11 of U355C low, and pin 13 of U355D high). Therefore, if pin 13 of U355D is low when the holdoff pulse terminates, U375B will stay set. When pin 13 of U355D goes positive, pin 11 of U355C goes negative causing a positive level at pin 14 of U355C. This positive level resets the trigger lockout latch U375B, causing pin 12 of U355D to go negative, allowing the next negative transition at pin 13 of U355D to set the trigger sweep gate latch U375A. This generates a new sweep gate at pin C.

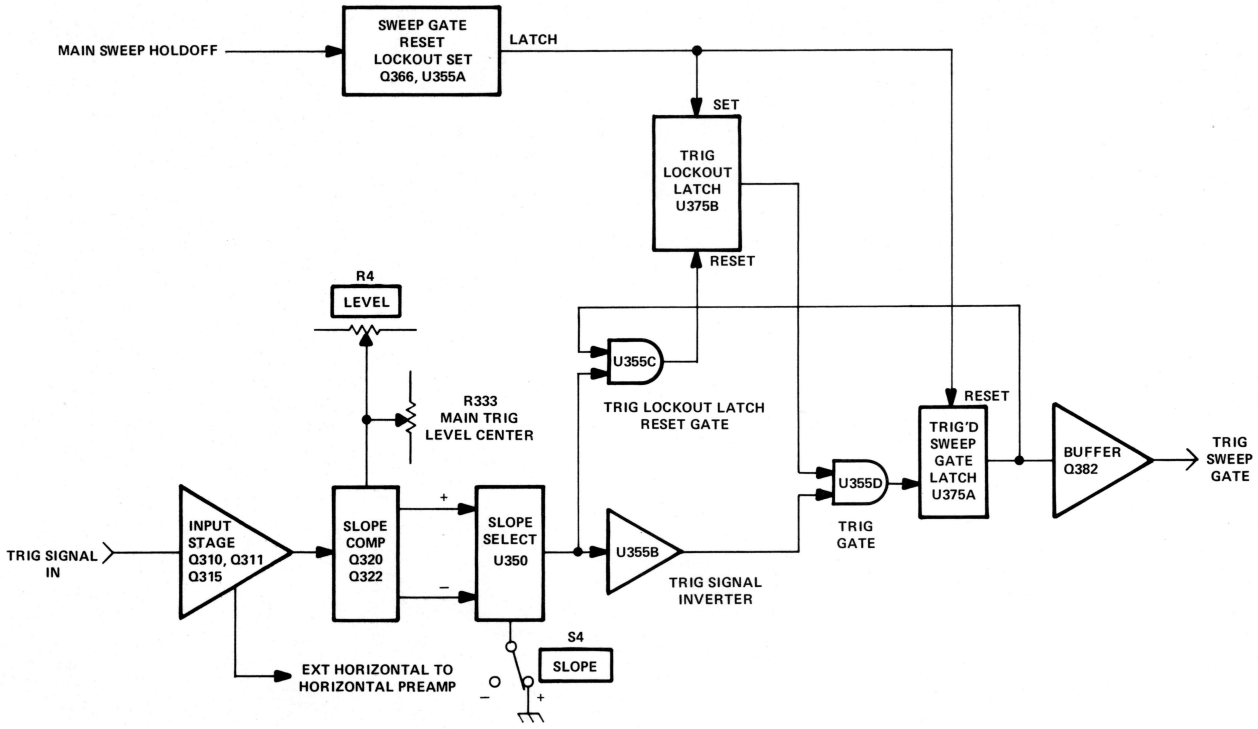


Fig. 2-3. Main Trigger Generator Block Diagram.

## MAIN SWEEP GENERATOR ◇3◇

The Main Sweep Generator circuit produces a sawtooth voltage which is amplified by the Horizontal Amplifier circuit to provide horizontal sweep deflection on the CRT of the indicator oscilloscope. This output signal is generated on command (trigger pulse) from the Main Trigger Generator. The Main Sweep Generator also produces a Main Sweep Gate pulse coincident with the time that the Main Sweep runs. The Main Gate pulse is processed by the Sweep Gate Out circuit and the indicator oscilloscope for CRT unblanking and Auxiliary Gate output. In addition, the Main Sweep Generator produces several control signals for other circuits within the instrument. Fig. 2-4 shows a detailed block diagram of the Main Sweep Generator and the schematic is shown on diagram 3 at the rear of the manual.

The MAIN TRIGGERING MODE switch allows three modes of operation. When the NORM button is pressed, a sweep is produced only when a trigger pulse is received from the Main Trigger Generator circuit. When the AUTO button is pressed, a sweep is produced as in NORM except that a free-running trace is displayed when a trigger pulse is not present. SINGLE SWP operation is also similar to NORM operation except that the sweep is not recurrent. The RESET button must be pressed to view another trace. The following circuit description is given with the MAIN TRIGGERING MODE switch pressed to NORM. Difference in operation for the other two modes is discussed later.

### Main Sweep Start Comparator

Q544, Q547, and Q551 comprise the Main Sweep Start comparator. In the absence of a trigger, Q544 is off and Q547 is held on by the high level from pin 3 of U520. The collector of Q547 is low and this low is coupled through emitter-follower Q551 to pin 1 of U580, thus preventing a sweep. When the Main Trigger Generator supplies a trigger, the positive transition is coupled to the base of Q544. The base of Q544 rises above the level at the base of Q547 and the current through common emitter resistor R545 is diverted from Q547 to Q544. The collector of Q547 rises and the positive step is coupled through emitter-follower Q551. The positive step appears across divider R555/R556 causing pin 1 of U580 to go positive, thus starting the sweep.

### Sawtooth Generator

The lower half of the U580 diagram symbol constitutes a Miller Integrator. When pin 1 is positive, a linear sawtooth (positive-going) is generated and appears at pin 8. The timing components, Rt and Ct connected to pins 8 and 9, determine the rate of change of the sawtooth waveform. Q596 prevents high-speed error currents from being coupled into U580 by way of C579 and pin 9.

### Sweep Stop Comparator

The Sweep Stop Comparator consists of Q564 and Q568. In the absence of a sawtooth signal at pin 8 of U580, Q568 is conducting and Q564 is held off by the positive level set at its base by R564, the Main Sweep Length adjustment. When the sawtooth voltage at pin 8 of U580 raises the base of Q568 higher than the base of Q564, Q568 turns off and Q564 turns on. The collector of Q564 rises and the positive step is coupled through emitter-follower Q538 to pin 16 of U520 and sweep holdoff begins.

### Holdoff Circuit

The Holdoff Circuit consists of pins 8, 10, 16, and 17 of U520 plus R and C time constants selected by the TIME/DIV switch. The holdoff prevents re-triggering the sweep generator until after the sweep timing capacitor(s) has discharged and the sweep circuits are again ready to generate a sweep.

At the end of the sawtooth waveform, a positive step is coupled to pin 16 of U520, by way of the Sweep Stop Comparator as previously described. The positive pulse seen at pin 16 of U520 is coupled internally through U520 to pin 17 and in turn to Q366 in the Main Trigger Generator. The Main Trigger Generator is reset and the output at connector pin C goes low. As a result, Q544 turns off and Q547 turns on. The collector of Q547 drops and the negative step is coupled through emitter-follower Q551, thus ending the sweep.

After a time determined by the timing components at pin 8, internal circuitry within U520 switches pin 17 to its low state, ending the holdoff gate. The Main Trigger Generator is released to generate a trigger signal.

A negative gate coincident with the positive holdoff gate, appears at pin 10 of U520. This negative gate is inverted by Q528 and coupled to the Delayed Sweep Generator for composite holdoff functions.

### Trig'd Lamp Driver

When the main sweep gate is high and the sweep is running, the TRIG'D lamp is on. At all other times the lamp is off.

### Delay Pickoff

The upper half of the diagram symbol for U580 includes the Delay Pickoff circuitry. Inside U580, the main sweep sawtooth signal is applied to one side of a comparator circuit. Pin 6 is connected to the other side of the comparator. The setting of the DELAY TIME MULTIPLIER control, R9, determines the point on the main sweep sawtooth at which the comparator switches.

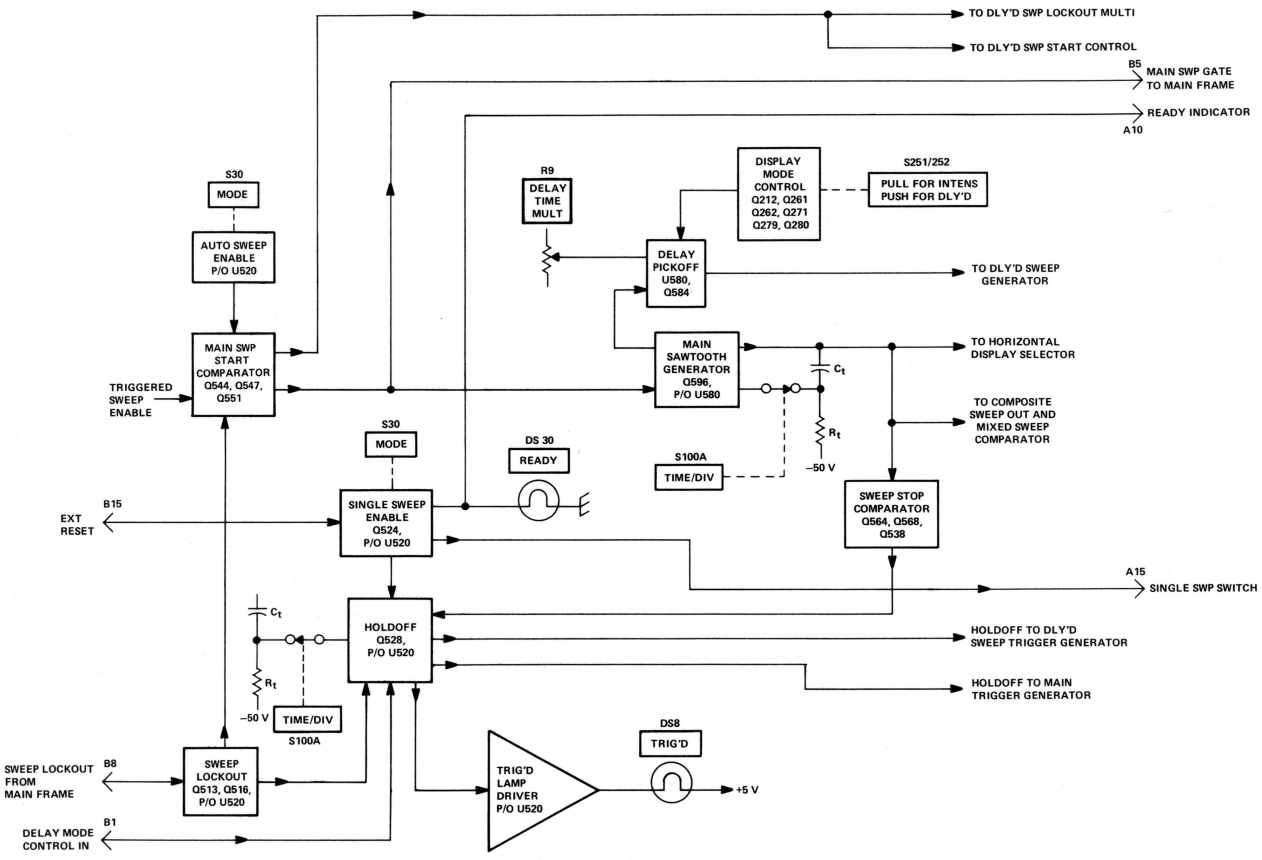


Fig. 2-4. Main Sweep Generator Block Diagram.

When the comparator switches (delay pickoff occurs), a positive gate appears at pin 4 of U580. This gate terminates at the end of the main sweep sawtooth.

The positive-going gate at pin 4 of U580 is coupled through emitter-follower Q584 to the Delayed Sweep Holdoff Generator via Q671.

## Auto Triggering Mode

Operation of the Main Sweep Generator circuit in the AUTO position of the MAIN TRIGGERING MODE switch is the same as for NORM position just described when a trigger pulse is applied. However, when a trigger pulse is not present, a free-running reference trace is produced in the AUTO position. This occurs as follows:

The Auto Triggering circuit consists of pins 1, 3, 6, and 19 of U520. When the AUTO button of the MAIN TRIGGERING MODE switch is pressed, a low at pin 19 of U520 enables the Auto Circuit. When a repetitive trigger signal above 30 Hz, and of adequate amplitude is applied to the Main Sweep Start Comparator and pin 1 of U520, the internal Auto Multi at pin 6 of U520 charges towards five volts through C535 and R535, but is discharged by each incoming trigger pulse.

In the absence of a trigger pulse, C535 charges towards +5 V, switching pin 6 to its high state and pin 3 to its low state. Q547 turns off, its collector rises and a high is coupled through emitter follower Q551 to pin 1 of U580, causing the sweep to run.

## Single Sweep Operation

Operation of the Main Sweep Generator in the SINGLE SWEEP position of the MAIN TRIGGERING MODE switch is similar to operation in the NORM position as previously described. However, after one sweep has run, all other sweeps are inhibited until the RESET button is pressed. A READY lamp is provided to indicate when the sweep is ready to accept a trigger.

The Single Sweep circuit consists of pins 11, 12, 14, 15, and 17 of U520. For SINGLE SWP operation, the +5 volt supply is applied to pin 12 of U520. The holdoff pulse at pin 17 of U520 goes positive, preventing generation of a sweep. When the RESET button is pressed, pin 15 is momentarily held to ground, pin 17 goes low to allow the Main Trigger Generator to accept a trigger. The holdoff line (pin 17 of U520) stays low until a sweep has been completed. At this time, the holdoff pulse rises at pin 17 and stays in the holdoff state until the RESET button is pressed.

Q524 acts as a switch for the READY lamp. When the holdoff gate at pin 17 is high, preventing the sweep generator from accepting a trigger, pin 11 is high and Q524 and the READY lamp are off. When the RESET button is pressed, the holdoff gate at pin 17 goes low and allows the Main Sweep Generator to accept a trigger. Pin 11 rises and turns on Q524, which provides the current to turn on the READY lamp.

## Sweep Lockout

Q513, Q516, Q538, and pins 3, 16, and 18 of U520 comprise the Sweep Lockout circuit. The Sweep Lockout circuit is functional when the 7B53A/7B53AN is installed in the B Horizontal compartment of an indicator oscilloscope which accommodates two horizontal plug-in units, and it is desired to operate in the Alternate Horizontal Mode, or to operate the 7B53A/7B53AN as a delayed sweep unit. Lockout is applied to the 7B53A/7B53AN during the time that the sweep from the associated time base is displayed.

The indicator oscilloscope controls initiation of a sweep by supplying current to the base of Q513 when lockout is required. This current causes a positive step at pin 18 of U520. Pin 3 of U520 steps positive and Q547 turns on. The collector of Q547 falls and the low is coupled through emitter-follower Q551 to pin 1 of U580, thus preventing the sweep. If lockout is initiated while the sweep is running, the leading edge of the lockout pulse is differentiated through C519 and R519, coupled through emitter-follower Q538 and appears as a high at pin 16 of U520. This starts the holdoff cycle. (The holdoff cycle is as described previously.)

## Delayed Mode Control

When the 7B53A/7B53AN is installed in the B Horizontal compartment of an indicator oscilloscope with two horizontal compartments, the Delayed Mode Control determines whether the 7B53A/7B53AN operates as an independent time base or as a delayed sweep unit in the triggerable after delay time mode. When approximately +3 to 4.5 volts is present at interface connector B1 (and therefore pin 13 of U520), the Auto Circuit (previously described) is disabled. A sweep can be enabled only by a trigger pulse to the Sweep Start Comparator. During delay time determined by the settings of the delaying sweep unit, sweep lockout (previously described) inhibits the sweep. After delay time, the 7B53A/7B53AN can be triggered. An approximate zero volt level at pin 13 of U520 enables the Auto Circuit, causing the 7B53A/7B53AN to operate as an independent time base.

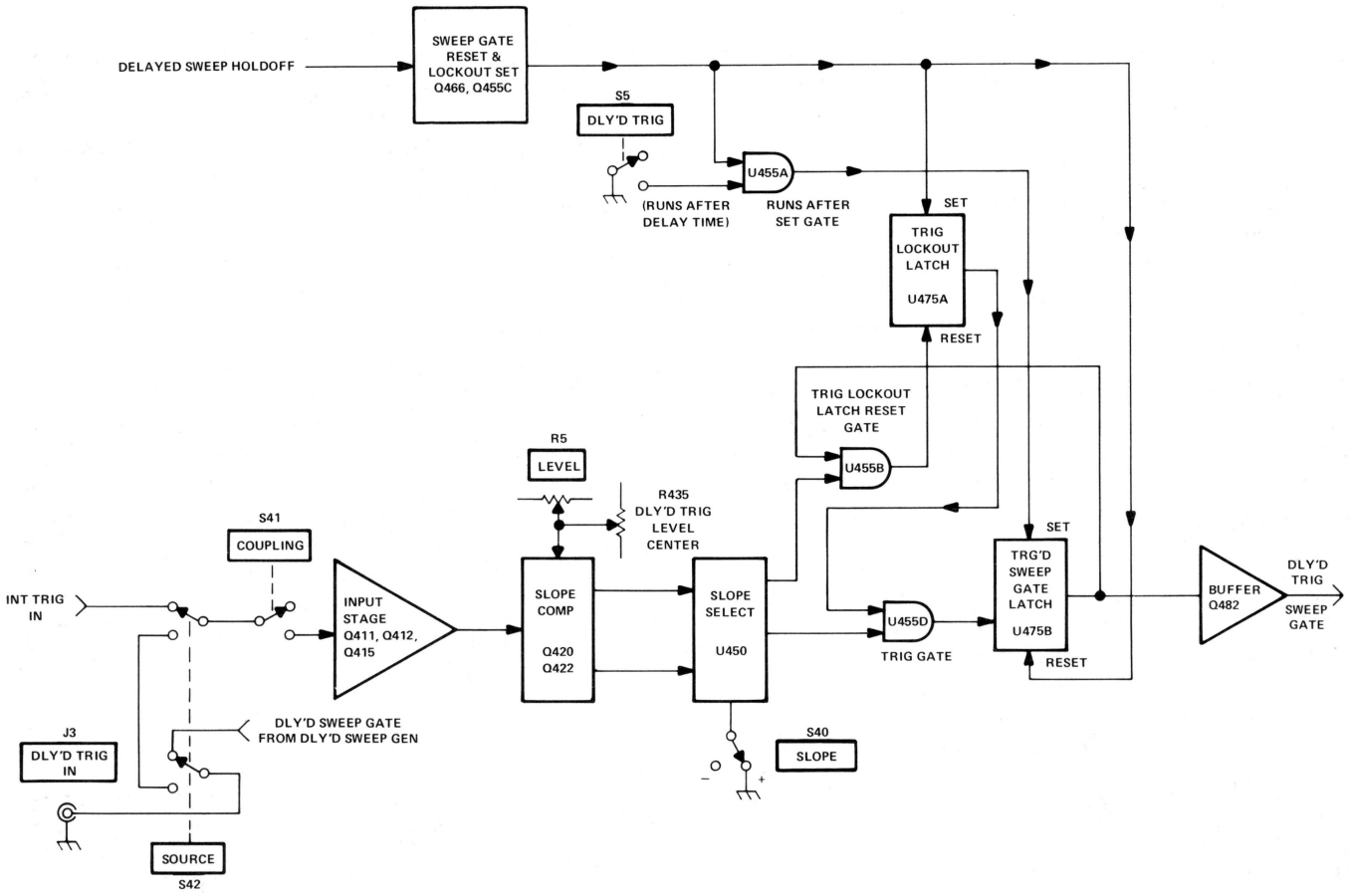


**Fig. 2-5. Delayed Trigger Generator Block Diagram.**

## DELAYED TRIGGER GENERATOR ④

The Delayed Trigger Generator circuitry is essentially the same as the Main Trigger Generator, except for the Runs After Dly Time and Triggerable After Delay Time modes. Therefore, only the circuitry involving these modes will be described. For detailed description of the remaining delayed trigger circuitry, refer to the Main Trigger Generator discussion. Fig. 2-5 shows a detailed block diagram of the Delayed Trigger Generator; the schematic is shown on diagram 4 at the rear of this manual.

When the DLY'D TRIG LEVEL is set to RUNS AFTER DLY TIME, S5 grounds R469 and pin 4 of U455A is forced to the low state. Thus, pin 2 of U455A will follow pin 5, but reversed in polarity. When the holdoff pulse is applied to the base of Q466, pin 4 of U455C goes to the high state, which resets U475B and terminates the sweep gate. When the holdoff pulse terminates, pin 4 of U455C goes to the low state and pin 2 of U455A goes to the high state. This sets U475B which generates a new sweep gate.

When the DLY'D TRIG LEVEL control is in the Triggerable After Dly Time mode, pin 4 of U455A is high and pin 2 is low. Therefore, pin 12 of U475B is also low and the Delayed Trigger Generator operates in the Triggerable After Dly Time mode in a similar way as the Main Trigger Generator operates.

## DELAYED SWEEP GENERATOR ⑤

The Delayed Sweep Generator produces a sawtooth voltage which is amplified by the Horizontal Amplifier circuits to provide a delayed sweep CRT display. The sawtooth output voltage is generated on command of the Delayed Trigger Generator. The Delayed Sweep Generator also produces a Delayed Sweep Gate pulse, coincident with the time that the Delayed Sweep Generator runs, to be processed by the Sweep Gate Out circuit and the oscilloscope for CRT unblanking. Fig. 2-6 shows a detailed block diagram of the Delayed Sweep Generator and the schematic is shown on diagram 5 at the rear of the manual.

## Dly'd Swp Start Multi

Q603 and Q608 comprise the Dly'd Swp Start Multi. This circuit is connected as a bistable multivibrator, with Q608 normally conducting and Q603 off.

When pin 15 of U475B (Delayed Trigger Generator) switches to its high state, the positive step appears at the base of Q603. This causes the multi to flip, so Q603 is on and Q608 is off, thus causing a positive step through Q610 to pin 1 of U650. Q608 remains in the positive state for the duration of the delay gate. At the end of the delay gate, the Dly'd Swp Start Multi reverts to its original state with Q603 off and Q608 on.

## Dly'd Swp Start Control

The Dly'd Swp Start Control circuit includes Q656, Q654 and Q610. This circuit couples a positive gate to pin 1 of U650 (Miller Integrator) to control the period during which a sawtooth is generated.

In all Display Modes except MIXED, Q656 and Q654 are inactive due to the +5 volts applied to the base of Q654, through CR654 and Q280, from the +5 volt supply. When the collector of Q608 (Dly'd Swp Start Multi) goes positive, Q610 couples the positive gate to pin 1 of U650, initiating the generation of the delayed sweep sawtooth.

When operating in the MIXED Display Mode, the anode circuit of CR654 is open. The gate from the Main Swp Start Multi is negative-going at the base of Q654. The resulting current from Q654 forward biases Q610, and a positive gate is coupled to pin 1 of U650.

## Mixed Swp Comparator

Q678, Q682, Q684 and Q688 comprise the Mixed Swp Comparator circuit. This circuit determines whether U650 is running at the main sweep or delayed sweep rate.

When the VARIABLE control is pulled for MIXED, Q682 is forward biased. The main sweep sawtooth at the emitter (and thus, the collector) of Q682 is a positive-going ramp. This causes a ramp of increasing current through Q684. During the time that a Delay Gate is not being generated, Q603 (Dly'd Swp Start Multi) is biased off and Q678 is on. In this condition, U650, Q678, Q684 and Q688 form a operational amplifier. The negative-going ramp at the collector of Q684 becomes a positive-going ramp at pin 8 of U650, running at the main sweep rate.

When the Delay Gate is generated, the Delayed Trigger Generator forward biases Q603. The collector current through R684 reverse biases Q678, opening the operational amplifier loop. U650 is released to run at the delayed sweep rate. Therefore, the sawtooth at pin 8 of U650 will first run at the main sweep rate and then change to the delayed sweep rate when the Delay Gate is generated.

## Dly'd Swp Stop

Pins 4, 5, and 6 of U650 (plus external circuitry) constitute the Dly'd Swp Stop circuit. The setting of the Dly'd Swp Length adjust (R652) determines the point on the delayed sweep sawtooth at which pin 4 of U650 goes positive.

## Dly'd Swp Lockout Multi and Dly'd Swp Holdoff

The operation of the Dly'd Swp Lockout and Holdoff circuits is dependent on the following signals:

1. The Dly'd Swp Stop signal (positive-going) at pin 4 of U650.

2. The Main Sweep Holdoff signal (positive-going) by way of R673.

3. The $\overline{\text{Main Sweep Gate}}$ (positive-going) at the base of Q665 through CR662.

4. The $\overline{\text{Dly Gate}}$ at the base of Q671.

Q659 and Q665 form the Dly'd Swp Lockout Multi. When the Dly'd Swp Stop circuit causes pin 4 of U650 to go positive, Q659 turns on and Q665 turns off, coupling a positive-going holdoff pulse to pin G. At the end of the main sweep, the positive going $\overline{\text{Main Sweep Gate}}$ pulse turns on Q665 and its collector falls. But the positive-going main holdoff pulse through R673 keeps pin G positive. When the main sweep holdoff pulse falls, the level at pin G remains positive, due to the negative going $\overline{\text{Dly Gate}}$ pulse applied to Q671. After the delay time determined by the TIME/DIV OR DLY TIME switch and the DELAY TIME MULT dial, the $\overline{\text{Dly Gate}}$ pulse rises, Q671 turns off, and the holdoff pulse at pin G goes negative.

When operating in the MIXED Display Mode, the Delayed Sweep Stop signal (positive-going) at pin 4 of U650, turns on Q659. The negative step at its collector turns on Q656 and turns off Q654. The resulting negative level at the collector of Q654 is coupled through emitter follower Q610, thus removing the positive level from pin 1 of U650.

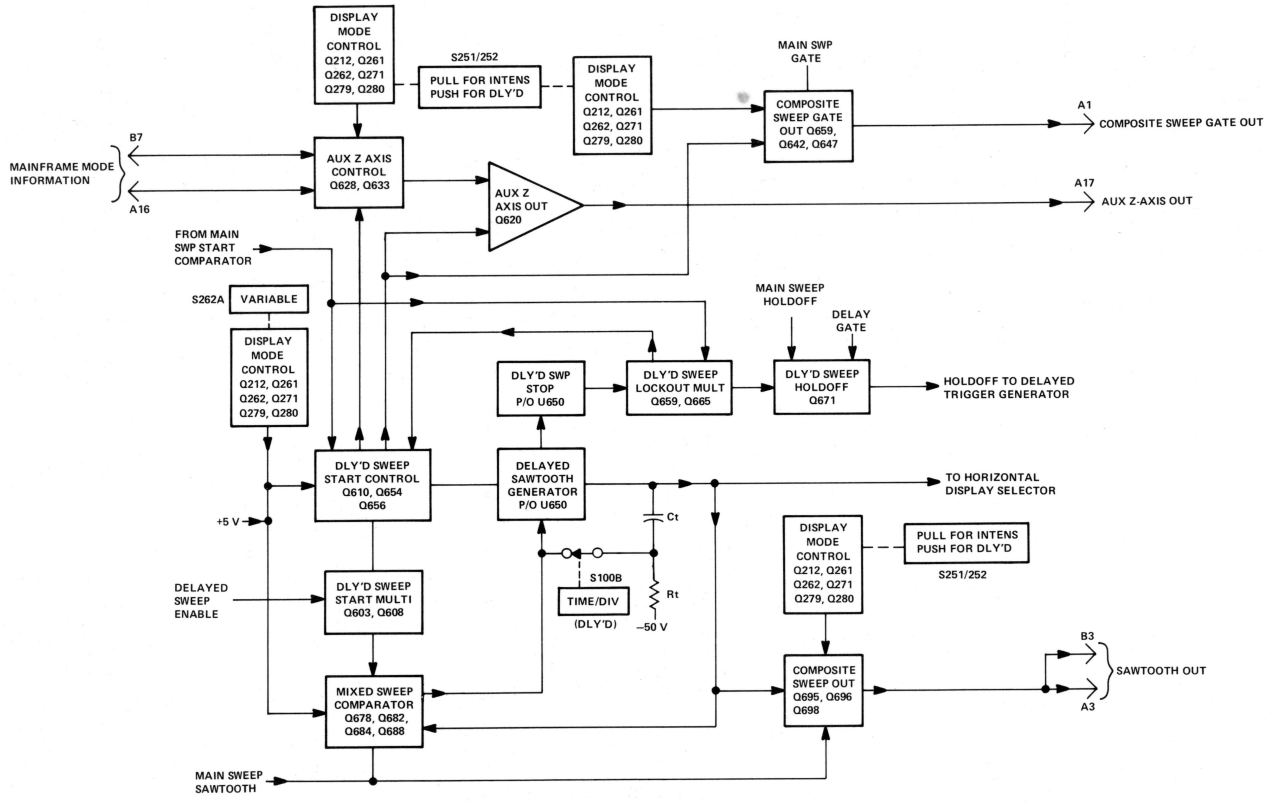


Fig. 2-6. Delayed Sweep Generator Block Diagram.

### Composite Swp Out

Q695, Q696 and Q698 form the Composite Swp Out circuit. When the TIME/DIV switch is set for MAIN SWP or INTENS, Q696 is forward biased, coupling the main sweep sawtooth to the base of Q698. Q698 is an emitter-follower stage which couples the signal to output terminals A3 and B3.

If DLY'D or MIXED SWP is selected by the TIME/DIV OR DLY TIME switch, Q695 is forward biased and couples the delayed sweep or mixed sweep sawtooth to the base of Q698.

Q696 and Q698 or Q695 and Q698 (depending on TIME/DIV OR DLY TIME setting) are connected as an operational amplifier, providing a high degree of gain stability.

### Composite Swp Gate Out

The Composite Sweep Gate Out circuit includes Q642, Q639 and Q647. The output at the collector of Q647 connects to interface connector pin A1 for use in the indicator oscilloscope. In the AMPL position of the TIME/DIV OR DLY TIME switch, connector A1 is set to approximately +4.3 volts (via CR201) to unblank the CRT.

Q647 serves as the output stage. With the TIME/DIV OR DLY TIME switch set to either MAIN SWP or INTENS, Q642 couples the main sweep gate to the base of Q647. When either DLY'D or MIXED SWP is selected, Q639 is on. The gate signal at the emitter of Q610 (Dly'd Swp Start Control) is coupled to the base of Q647.

### Aux Z Axis Control

The Aux Z Axis Control circuit includes Q628 and Q633. This circuit uses the indicator oscilloscope mode and switching levels to determine when the sweep signal from the 7B53A/7B53AN is being displayed on the CRT. Information of this type is normally used only when operating the 7B53A/7B53AN in a four plug-in indicator oscilloscope.

Typical levels to cause the Aux Z Axis Control to intensify the CRT are +5 volts at terminal A16 and −0.6 volt at terminal B7. This forward biases Q633, resulting in a positive level at its emitter.

When the 7B53A/7B53AN is used in a three plug-in indicator oscilloscope and the TIME/DIV OR DLY TIME switch is set to INTENS, Q628 is off and Q633 is forward biased.

### Aux Z Axis Out

Q620 is the Aux Z-Axis Out stage. The output at connector DZ is connected to pin A17 on the interface connector and then to the Z-axis circuit in the indicator oscilloscope. A reduction in current through Q620 causes the CRT trace to brighten.

For this description, assume that the 7B53A/7B53AN is used in a three plug-in indicator oscilloscope.

As described under Aux Z Axis Control, when INTENS is selected by the TIME/DIV OR DLY TIME switch, Q633 is turned on. The positive level at the emitter of Q633 reverse-biases CR635, which reduces conduction of Q620. The positive gate appearing at the emitter of Q610 (Dly'd Swp Start Control) during the delayed sweep further reduces current through Q620, causing the CRT trace to intensify beyond the normal level of unblanking.

In all other selections of the TIME/DIV OR DLY TIME switch, Q628 is forward biased through CR285. This turns off Q633, which diverts current through CR635. Q620 is in saturation and the CRT trace brightness is now set by the unblanking signal (Sweep Gate).

## HORIZONTAL PREAMP ⑧

The Horizontal Preamp selects the source of the output signal (main or delayed sweep) and supplies an amplified sawtooth signal to the horizontal circuits in the indicator oscilloscope. In addition, this circuit contains the horizontal magnifier circuit and the horizontal positioning network. Fig. 2-7 shows a detailed block diagram of the Horizontal Preamp and the schematic is shown on diagram 8 at the rear of the manual.

### Ext Horiz Amp

The Ext Horiz Amp consists of Q734. When the TIME/DIV OR DLY TIME switch is in any setting except AMPL, the +5 volts coupled through CR735 to the base of Q734 holds this transistor off. Therefore, any incoming external horizontal signal is blocked. When the TIME/DIV OR DLY TIME switch is set to AMPL, the +5 volts is removed from the base of Q734 and the output signal is coupled through R734.

### Horiz Display Selector

Q724 and U720A, B, C, D, and E comprise the Horiz Display Selector circuitry. Depending upon the setting of the TIME/DIV OR DLY TIME switch, this circuit determines which signal is coupled to the Horiz Out Amp.

When the TIME/DIV OR DLY TIME switch is set to AMPL, U720C is forward biased and couples the signal from the Ext Horiz Amp to the Horiz Out Amp. Simultaneously, +5 volts is disconnected from the Display Mode

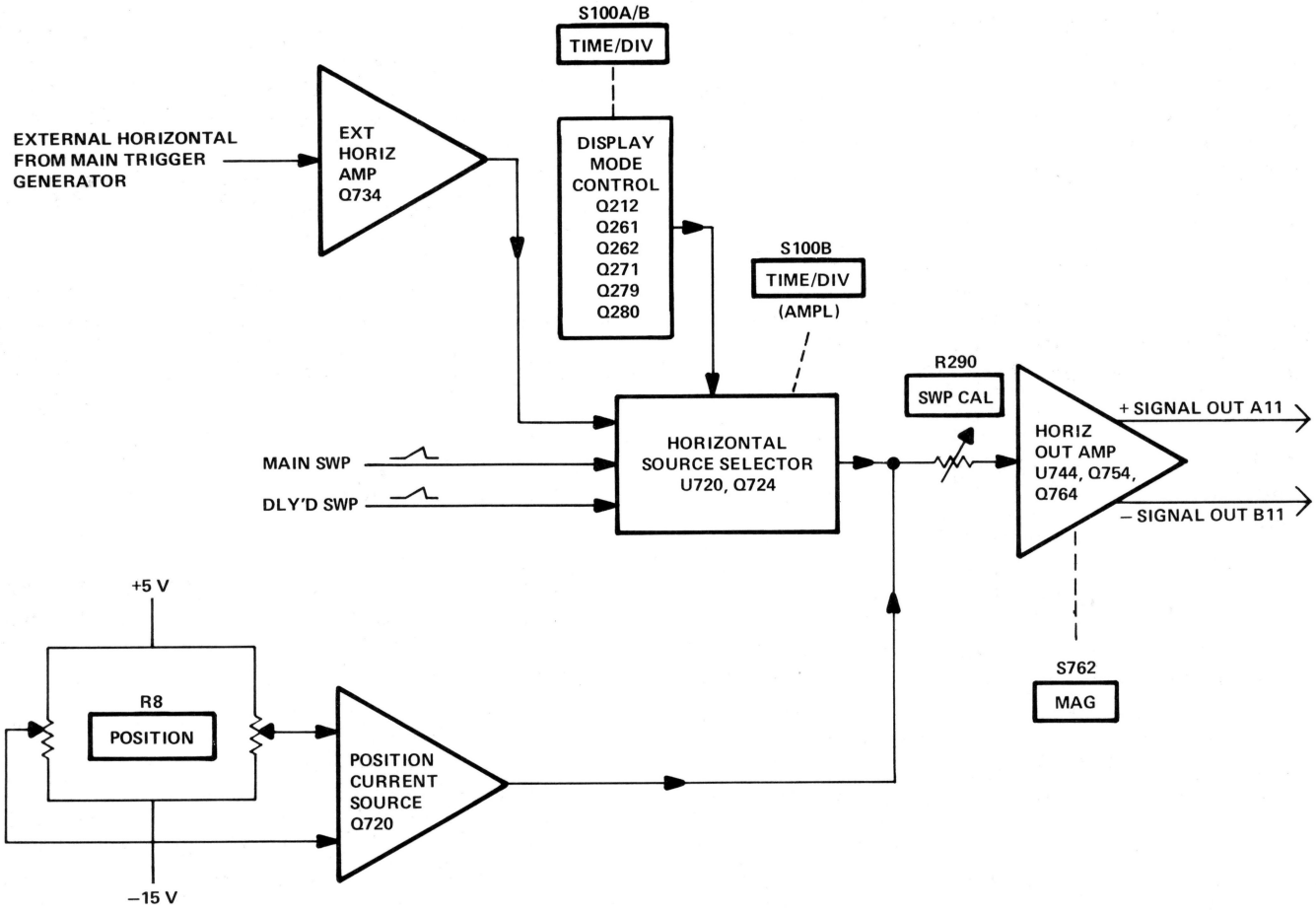


Fig. 2-7. Horizontal Preamp Block Diagram.

Control circuit, assuring that no internally generated sweep signal is coupled through at this time. In all other positions of the TIME/DIV OR DLY TIME switch, +5 volts is connected to the Display Mode Control circuit.

When MAIN SWP or INTENS is selected by the TIME/DIV OR DLY TIME switch, +5 volts is applied to the anode of CR283. This forward biases U720A, which couples the main sweep sawtooth to the Horiz Out Amp. Q724 is also forward biased so that any signal developed by the Delayed Sweep Generator is by-passed to ground (via the –15 volt supply). Any output from the Ext Horiz Amp is coupled to ground through U720D.

When operating in the DLY'D SWP or MIXED Display Mode, +5 volts is applied to the base of U720B through CR265. This forward-biases U720B, which couples the delayed sweep or the mixed sweep signal to the Horiz Out Amp. U720E is also forward biased, coupling the main sweep signal to ground.

## Position Amp

The POSITION control R8 sets the bias on Q720, thus setting the DC current coupled to the Horiz Out Amp.

## Horiz Out Amp

The Horiz Out Amp includes Q754, Q764, and U744A, B, C, and D. U744B and U744C are connected as an operational amplifier, with $R_f$ being R768 and $R_i$ the Swp Cal adjust, R290.

U744C and U744D form a paraphase amplifier. This stage converts the single-ended input signal to a push-pull output signal which is necessary to drive the horizontal output stage in the indicator oscilloscope.

This stage also provides the X10 magnification and Mag Gain adjustment. When the MAG X10 button is out, R761 and R762 are connected in parallel with R759 and R766, decreasing the emitter degeneration of the stage. This increases gain of the stage 10 times. The Mag Gain adjust is set to provide a calibrated gain when magnified.

Q754 and U744A set the operating bias for the output stage. Q764 serves as a constant-current source for U744C and U744D.

## READOUT SWITCHING ⑦

The Readout Switching circuit consists of switching resistors which signal the oscilloscope readout system of the time-base unit sweep rate. The switching resistors are selected by the Time/Division and X10 MAG switch settings.

Refer to schematic diagram 7, Readout Switching, at the rear of this manual. The numbers 1, 2, or 5 are selected by resistors R940, R907, and R905 for Channel 1 (main sweep); and by resistors R941, R919, and R917 for Channel 2 (delayed sweep). The number of zeros is selected by R934, R911, and R909 for Channel 1; and by resistors R935, R923, and R921 for Channel 2. The time prefix (milli, micro, nano) is selected by resistors R928, R903, and R901 for Channel 1; and by resistors R929, R915, and R913 for Channel 2. Resistors R927 and R925 select the symbol S (seconds) for Channel 1 and resistors R939 and R926 select the symbol S for Channel 2. When the VARIABLE Time/Division control is in the Uncalibrated position, R931 selects the symbol > (greater than) for Channel 1 and R922 selects the symbol > for Channel 2. When the MAG switch is in the X10 position, R943 is switched out of the circuit for Channel 1 and R944 is switched out of the circuit for Channel 2.

# MAINTENANCE

## Introduction

This section of the manual contains maintenance information for use in preventive maintenance, corrective maintenance, and troubleshooting of the 7B53A/7B53AN.

## PREVENTIVE MAINTENANCE

### General

Preventive Maintenance consists of cleaning, visual inspection, lubrication, etc. Preventive maintenance performed on a regular basis may prevent instrument breakdown and will improve reliability of this instrument. The severity of the environment to which the 7B53A/7B53AN is subjected determines the frequency of maintenance. A convenient time to perform preventive maintenance is preceding recalibration of the instrument.

### Cleaning

The 7B53A/7B53AN should be cleaned as often as operating conditions require. Accumulation of dirt in the instrument can cause overheating and component breakdown. Dirt on components acts as an insulating blanket and prevents efficient heat dissipation. It may also provide an electrical conduction path.

The covers of the oscilloscope reduce the amount of dust which reaches the interior of the 7B53A/7B53AN. Operation of the system without the oscilloscope covers in place necessitates more frequent cleaning. When the instrument is not in use, it should be stored in a protected location such as a dust-tight cabinet.

**CAUTION**

*Avoid the use of chemical agents which might damage the plastics used in this instrument. Avoid chemicals which contain benzene, toluene, zylene, acetone, or similar solvents.*

**Exterior.** Loose dust accumulated on the outside of the 7B53A/7B53AN can be removed with a soft cloth or small paint brush. The paint brush is particularly useful for dislodging dirt on and around the front-panel controls. Dirt which remains can be removed with a soft cloth dampened in a mild detergent and water solution. Abrasive cleaners should not be used.

**Interior.** Dust in the interior of the instrument should be removed occasionally due to its electrical conductivity under high-humidity conditions. The best way to clean the interior is to blow off the accumulated dust with dry low-velocity air. Remove any dirt which remains with a soft paint brush or cloth dampened with a mild detergent and water solution. A cotton-tipped applicator is useful for cleaning in narrow spaces.

### Visual Inspection

The 7B53A/7B53AN should be inspected occasionally for such defects as broken connections, broken or damaged circuit boards, improperly seated transistors or relays, and heat-damaged parts.

The corrective procedure for most visible defects is obvious; however, particular care must be taken if heat-damaged components are found. Overheating usually indicates other trouble in the instrument; therefore, it is important that the cause of overheating be corrected to prevent a recurrence of the damage.

### Semiconductor Checks

Periodic checks of the transistors, FET's, and IC's used in the 7B53A/7B53AN are not recommended. The best indication of performance is the actual operation of the device in the circuit. Performance of the circuits is thoroughly checked during recalibration; substandard semiconductors will usually be detected at that time.

### Recalibration

To ensure accurate measurements, check the calibration of this instrument each 1000 hours of operation or every six months if used infrequently. In addition, replacement of components may necessitate recalibration of the affected circuits. Calibration instructions are given in Section 4.

## TROUBLESHOOTING

### Introduction

The following information is provided to facilitate troubleshooting of the 7B53A/7B53AN. Information contained in other sections of this manual should be used along with the following information to aid in locating the defective component. An understanding of the circuit operation is very helpful in locating troubles. See the Circuit Description in Section 2.

## Troubleshooting Aids

**Diagrams.** Circuit diagrams are given on foldout pages in Section 6. The component number and electrical value of each component in this instrument are shown on the diagrams.

**Circuit Boards.** Fig. 6-2 (located in the diagrams section) shows the location of the circuit boards within this instrument along with the assembly numbers. The assembly numbers are used on the diagrams to aid in locating the boards. Pictures of the circuit boards are shown in the Diagrams section, on the back of the page opposite the circuit diagram, to aid the cross-referencing between the diagrams and the circuit-board pictures. Each electrical component on the boards is identified by its circuit number as well as the interconnecting wire or connectors. The circuit boards are also outlined on the diagrams with a blue line to show which portions of the circuit are located on a circuit board.

**Switch Cam Identification.** Switch cam numbers shown on the diagrams indicate the position of the cam in the complete switch assembly. The switch cams are numbered from front to rear.

**Diode Color Code.** The cathode end of each glass encased diode is identified by a stripe, a series of stripes, or a dot. For most silicon or germanium diodes with a series of stripes, the color code also indicates the type of diode or identifies the TEKTRONIX Part Number using the resistor color-code system (e.g., a diode color coded blue-or pink brown-gray-green indicates TEKTRONIX Part No. 152-0185-00). The cathode and anode ends of a metal-encased diode can be identified by the diode symbol marked on the body.

**Transistor and Integrated Circuit Basing.** Fig. 6-1 (located in the diagrams section) illustrates basing configurations for all transistors and integrated circuits used in the 7B53A/7B53AN.

**Wiring Color Code.** Insulated wire and cable used in the 7B53A/7B53AN is color-coded to facilitate circuit tracing.

**Interface Connector Pin Locations.** The Interface circuit board couples the 7B53A/7B53AN to the associated oscilloscope. Fig. 3-1 illustrates the locations of pins on the interface connector as shown on the Voltage distribution and Output Connectors schematic in the diagrams section.

## Troubleshooting Techniques

This troubleshooting procedure is arranged in an order which checks the simple trouble possibilities first. The first few checks ensure proper connection, operation, and calibration. If the trouble is not located by these checks, the remaining steps aid in locating the defective component. When the defective component is located, it should be replaced following the replacement procedures given under Corrective Maintenance.

**1. Check Control Settings.** Incorrect control settings can indicate a trouble that does not exist. If there is any question about the correct function or operation of any control, see the Operating Instructions in this manual or the detailed Operating Instructions in the 7B53A/7B53AN Operators Manual.

**2. Check Associated Equipment.** Before proceeding with troubleshooting of the 7B53A/7B53AN, check that the equipment used with this instrument is operating correctly. Check that the signal is properly connected and that the probe (if used) is not defective. The indicator oscilloscope and vertical plug-in unit can be checked for proper operation by substituting another time-base unit which is known to be operating properly (preferably another 7B53A/7B53AN or similar unit). If the trouble persists after substitution, the oscilloscope or vertical plug-in unit should be checked.

**3. Visual Check.** Visually check the portion of the instrument in which the trouble is located. Many troubles can be located by visual indications such as unsoldered connections, broken wires, damaged components.

**4. Check Instrument Calibration.** Check the calibration of this instrument, or the affected circuit if the trouble exists in one circuit. The apparent trouble may only be a result of misadjustment and may be corrected by calibration. Complete calibration instructions are given in the Calibration section.

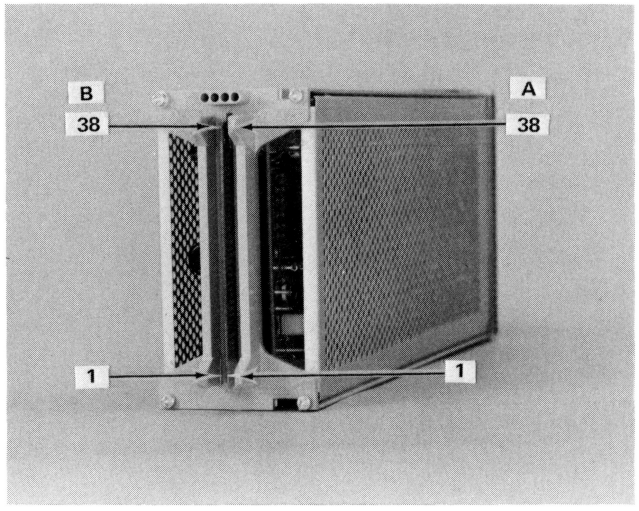


**Fig. 3-1. Location of pins on Interface connector.**

**5. Isolate Trouble to a Circuit.** To isolate a trouble to a particular circuit, note the trouble symptom. The symptom often indicates the circuit in which the trouble is located. For example, if stable triggering can be obtained in INT position of the SOURCE switch and cannot be obtained in the EXT or LINE positions, the External Trigger Preamp or Trigger Source Switching circuits are probably at fault. When trouble symptoms appear, use the front-panel controls and the CRT display to isolate the trouble to one circuit. Remember, the amplifier unit or the indicator oscilloscope may be responsible for the trouble. When trouble appears in more than one circuit, check all affected circuits by taking voltage and waveform measurements. Once the defective circuit has been located, proceed with steps 6 and 7 to locate the defective component(s).

**6. Check Individual Components.** The following procedures describe methods of checking individual components in the 7B53A/7B53AN. Components which are soldered in place are best checked by disconnecting one end. This isolates the measurement from the effects of surrounding circuitry.

a. TRANSISTORS. The best check of transistor operation is actual performance under operating conditions. If a transistor is suspected of being defective, it can be checked by substituting a new component or one which has been checked previously. However, be sure that circuit conditions are not such that a replacement transistor might also be damaged. If substitute transistors are not available, use a dynamic tester (such as TEKTRONIX Type 576).

b. INTEGRATED CIRCUITS. Integrated circuits should not be replaced unless they are actually defective. The best method for checking these devices is by direct substitution with a new component or one which is known to be good. Be sure that circuit conditions are not such that a replacement component might be damaged.

c. DIODES. A diode can be checked for an open or for a short circuit by measuring the resistance between terminals with an ohmmeter set to the R X 1k scale. The diode resistance should be very high in one direction and very low when the meter leads are reversed. Do not check tunnel diodes or back diodes with an ohmmeter.

**CAUTION**

*Do not use an ohmmeter scale that has a high internal current. High currents may damage the diode.*

d. RESISTORS. Resistors can be checked with an ohmmeter. Check the Electrical Parts List for the tolerance of the resistors used in this instrument. Resistors normally do not need to be replaced unless the measured value varies widely from the specified value.

e. INDUCTORS. Check for open inductors by checking continuity with an ohmmeter. Shorted or partially shorted inductors can usually be found by checking the waveform response when high-frequency signals are passed through the circuit. Partial shorting often reduces high-frequency response.

f. CAPACITORS. A leaky or shorted capacitor can best be detected by checking the resistance with an ohmmeter on the highest scale. Do not exceed the voltage rating of the capacitor. The resistance should be high after initial charge of the capacitor. An open capacitor can best be detected with a capacitance meter or by checking whether the capacitor passes AC signals.

**7. Repair and Readjust the Circuit.** If any defective parts are located, follow the replacement procedures given in this section. Be sure to check the performance of any circuit that has been repaired, or that has had any electrical components replaced.

## CORRECTIVE MAINTENANCE

### General

Corrective maintenance consists of component replacement and instrument repair. Special techniques required to replace components in the instrument are given here.

### Obtaining Replacement Parts

All electrical and mechanical part replacements for the 7B53A/7B53AN can be obtained through your local TEKTRONIX Field Office or representative. However, many of the standard electronic components can be obtained locally in less time than is required to order them from Tektronix, Inc. Before purchasing or ordering replacement parts, check the parts list for value, tolerance, rating, and description.

*NOTE*

*When selecting replacement parts, it is important to remember that the physical size and shape of a component may affect the performance in the instrument, particularly at high frequencies. All replacement parts should be direct replacements unless it is known that a different component will not adversely affect instrument performance.*

When ordering replacement parts from Tektronix, Inc., include the following information:

1. Instrument Type.

2. Instrument Serial Number.

3. A description of the part (if electrical, include circuit number).

4. TEKTRONIX Part Number.

## Component Replacement

**WARNING**

*Disconnect the equipment from the power source before replacing components.*

**Semiconductor Replacement.** Semiconductor devices used in this instrument should not be replaced unless actually defective. If removed from their sockets during routine maintenance, return them to their original sockets. Unnecessary replacement may affect the calibration of this instrument. When replaced, check the operation of that part of the instrument which may be affected.

Replacement devices should be of the original type or a direct replacement. Replace in the same manner as the original. Fig. 6-1 (located in diagram section) shows the lead configurations of the semiconductor devices used in this instrument. When replacing, check the manufacturer's basing diagram for correct basing.

**Interconnecting Pin Replacement.** Two methods of interconnection are used in this instrument to connect the circuit boards with other boards and components. When the interconnection is made with a coaxial cable, a special end-lead connector plugs into a socket on the board. Other interconnections are made with a pin soldered onto the board. Two types of mating connectors are used for these interconnecting pins. If the mating connector is mounted on a plug-on circuit board, a special socket is soldered into the board. If the mating connector is on the end of a lead, an end-lead pin connector is used which mates with the interconnecting pin. The following information provides the replacement procedure for the various interconnecting methods.

a. Coaxial-Type End-Lead Connectors

Replacement of the coaxial-type end-lead connectors requires special tools and techniques; only experienced maintenance personnel should attempt replacement of these connectors. It is recommended that the cable or wiring harness be replaced as a unit. For cable or wiring harness part numbers, see the Mechanical Parts List. An alternate method is to refer the replacement of the defective connector to your local TEKTRONIX Field Office or representative.

b. Circuit-Board Pins

*NOTE*

*A circuit-board pin replacement kit including necessary tools, instructions, and replacement pins is available from Tektronix, Inc. Order TEKTRONIX Part No. 040-0542-00.*

To replace a pin which is mounted on a circuit board, first disconnect any pin connectors. Then, unsolder the damaged pin and pull it out of the circuit board with a pair of pliers. Be careful not to damage the wiring on the board with too much heat. Ream out the hole in the circuit board with a 0.031-inch drill. Remove the ferrule from the new interconnecting pin and press the new pin into the hole in the circuit board. Position the pin in the same manner as the old pin. Then, solder the pin on both sides of the circuit board. If the old pin was bent at an angle to mate with a connector, bend the new pin to match the associated pins.

c. Circuit Board Pin Sockets

The pin sockets on the circuit boards are soldered to the rear of the board. To replace one of these sockets, first unsolder the pin (use a vacuum-type desoldering

tool to remove excess solder). Then straighten the tabs on the socket and remove it from the hole in the board. Place the new socket in the circuit board hole and press the tabs down against the board. Solder the tabs of the socket to the circuit board, being careful that solder does not flow into the socket.

*NOTE*

*The spring tension of the pin sockets ensures a good connection between the circuit board and the pin. This spring tension can be destroyed by using the pin sockets as a connecting point for spring-loaded probe tips, alligator clips, etc.*

d. End-Lead Pin Connectors

The pin connectors used to connect the wires to the interconnecting pins are clamped to the ends of the associated leads. To replace damaged end-lead pin connectors, remove the old pin connector from the end of the lead and clamp the replacement connector to the lead.

Some of the pin connectors are grouped together and mounted in a plastic holder; the overall result is that these connectors are removed and installed as a multi-pin connector. To provide correct orientation of this multi-pin connector when it is replaced, an arrow (or dot) stamped on the circuit board and a matching arrow is molded into the plastic housing of the multi-pin connector. Be sure these arrows are aligned as the multi-pin connector is replaced. If the individual end-lead pin connectors are removed from the plastic holder, note the color of the individual wires for replacement.

**Switch Replacement.** Two types of switches used in the 7B53A/7B53AN are the pushbutton switches and the cam-type switch. The following special maintenance information is provided.

a. PUSHBUTTON SWITCHES. Use the following procedure to replace pushbutton switches:

*NOTE*

*See Mechanical Parts exploded views to aid in pushbutton switch removal.*

1. Set the TIME/DIV OR DLY TIME and DLY'D Time/Division switch to AMPL to provide easy access to the setscrew on the clear plastic flange and to facilitate replacement of the Time/Division switch.

2. Loosen the setscrews and remove the LEVEL, SLOPE, POSITION, FINE, VARIABLE, and DLY'D TRIG LEVEL controls. Loosen two setscrews and remove the DLY'D Time/Division knob. Loosen one setscrew and remove the clear plastic flange associated with the TIME/DIV OR DLY TIME switch (setscrew behind the front subpanel).

3. Remove the spring from the 7B53A/7B53AN release latch.

4. Remove front panel to gain access to pushbutton switch mounting screws.

5. Loosen four screws holding the front subpanel to the chassis and the screws holding the switch to be replaced to the front subpanel.

6. Loosen any multi-pin connector(s) associated with the switch being replaced and unsolder leads or components where necessary.

7. When the switch being replaced is clear from external connection, remove the complete switch assembly.

8. To replace the pushbutton switch, reverse the above procedure. Observe the following precautions:

a. Make sure that the clear plastic flange and the DLY'D Time/Division knob are replaced at the same switch position from which they were removed (AMPL).

b. When replacing the DLY'D Time/Division knob and the clear plastic flange, slide the plastic flange onto the shaft but do not tighten. Then install the DLY'D Time/Division knob (it takes a little pressure) and tighten in place. Next, push the clear plastic flange (from behind the front subpanel) until it seats properly with the DLY'D Time/Division knob and lock in place. This will prevent backlash between the clear plastic and the DLY'D Time/Division knob as the cam is rotated.

b. CAM-TYPE SWITCH. The cam switch used in the 7B53A/7B53AN consists of two rotating cams (front portion for TIME/DIV OR DLY TIME and rear portion for DLY'D Time/Division) which mate with contacts on an adjacent Interface circuit board. These contacts are activated by lobes on the cams as the switch is rotated. The switch can be disassembled for inspection, cleaning, repair, or replacement, but it is recommended that the switch be removed from the instrument only as a unit. See Fig. 3-2 for special instructions on cam-switch removal.

**CAUTION**

*Repair of the cam switch should be undertaken only by skilled maintenance personnel. Switch alignment and contact spacing must be carefully maintained for proper operation of the switch. The cam switch repair kit (TEKTRONIX Part Number 040-0541-00) contains special alignment tools for use in repairing or replacing the switch contacts. For information or assistance on maintenance of the cam switch, contact your local TEKTRONIX Field Office or representative.*

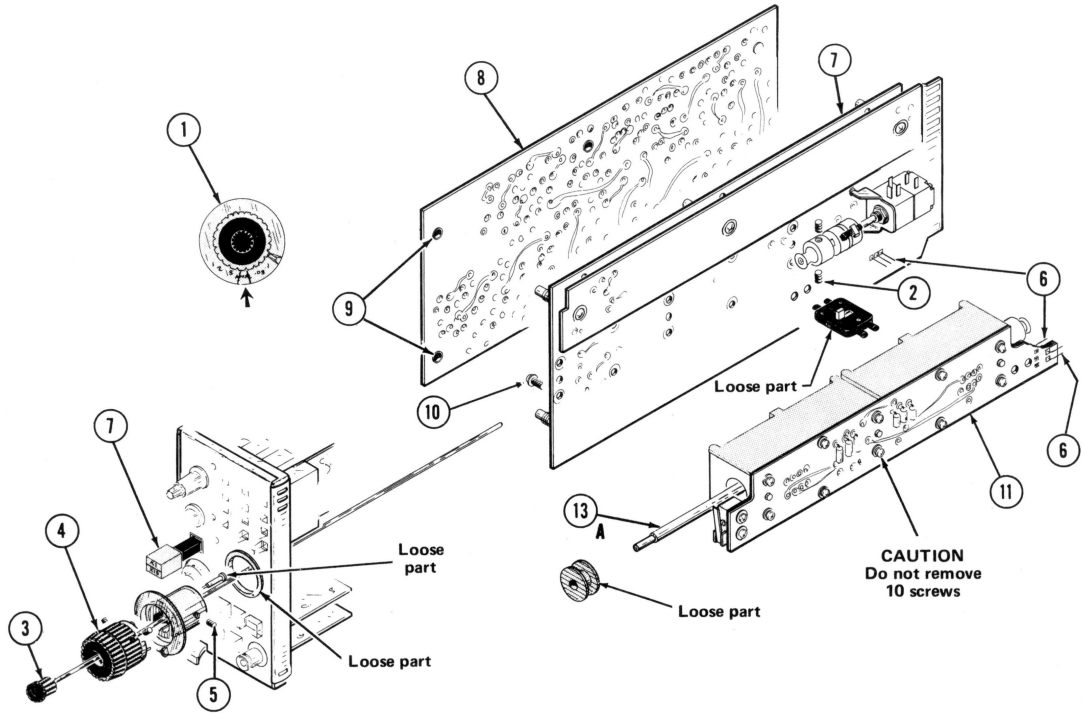


1. Set the TIME/DIV OR DLY TIME and DLY'D Time/Division switches to AMPL to provide easy access to the setscrew on the clear plastic flange (rear of front subpanel) and to facilitate replacement of the switches.

2. Loosen two setscrews to allow removal of VARIABLE control shaft (rotate the VARIABLE control as necessary).

3. Remove VARIABLE knob and shaft through front of instrument.

4. Loosen two setscrews and remove DLY'D Time/Division knob.

5. Loosen setscrew (located rear of front subpanel) and remove clear plastic flange.

6. Remove two interconnecting cables from rear of readout board (7B53A only) and one cable from Interface board (rear of cam-switch).

7. Remove MAG switch extension from switch and remove extension through front panel.

8. Remove four interconnecting cables from sweep board.

9. Remove six screws from sweep board and remove sweep board.

10. Remove eight screws holding can-switch assembly to Interface board (six screws 7B53AN).

CAUTION

Do not remove ten screws holding Readout board to cam-switch (7B53A only).

11. Remove cam switch assembly.

12. Follow the procedure as given in the switch repair kit to remove, replace, etc., the contacts on the Interface board.

13. To replace the cam switch, reverse the above procedure. Observe the following precautions:

a. The innerconcentric shaft of the cam switch must be properly aligned for correct switch operation. Insert innerconcentric shaft into rear of cam switch and push all the way in (it may be necessary to rotate shaft slightly). Rotate shaft fully clockwise (as viewed from rear of cam switch) and pull outward to lock into place.

b. When fastening the cam-switch to the Interface board, tighten the screws evenly (recommended torque is three inch pounds).

c. When replacing the sweep board, do not apply must pressure until it is certain that all pins from the Interface board have mated with the connectors on the Sweep board.

d. Make sure that the clear plastic flange and the DLY'D Time/Division knob are replaced at the same switch position from which they were removed (AMPL).

e. When replacing the DLY'D Time/Division knob and the clear plastic flange, slide the flange onto the shaft but do not tighten. Then install the DLY'D Time/Division knob (it takes a little pressure) and tighten in place. Next, push the clear plastic flange (from behind the front sub-panel) until it seats properly with the DLY'D Time/Division knob and lock in place. This will assure no backlash between the DLY'D Time/Division knob and the clear plastic flange as the cam is rotated.

Fig. 3-2. Cam Switch Removal.

# CALIBRATION

## Introduction

To assure instrument accuracy, check the calibration of the 7B53A/7B53AN every 1000 hours of operation, or every six months if used infrequently. Before complete calibration, thoroughly clean and inspect this instrument as outlined in the Maintenance section.

## TEKTRONIX Field Service

Tektronix, Inc., provides complete instrument repair and recalibration service at local Field Service Centers and the Factory Service Center. Contact your local TEKTRONIX Field Office or representative for further information.

## Using This Procedure

**General.** This section provides several features to facilitate checking or adjusting the 7B53A/7B53AN. These are:

**Index.** To aid in locating a step in the Performance Check or Adjustment procedure, an index is given preceding Part I—Performance Check and Part II—Adjustment procedure.

**Performance Check.** The performance of this instrument can be checked without removing the covers or making internal adjustments by performing only Part I—Performance Check. This procedure checks the instrument against the tolerances listed in the Performance Requirement column of the Specification Section in the 7B53A/7B53AN Operators Manual. Screwdriver adjustments accessible from the outside of the instrument are adjusted as part of the Performance Check procedure. In addition, a cross-reference is provided to the step in Part II—Adjustment which will return the instrument to correct calibration. In most cases, the adjustment step can be performed without changing control settings or equipment connections.

**Adjustment Procedure.** To return this instrument to correct calibration with the minimum number of steps, perform only Part II—Adjustment. The Adjustment procedure gives the recommended calibration procedure for all circuits in this instrument. Procedures are not given for checks which can be made without removing the covers; see Part I—Performance Check for the procedure for these checks.

**Partial Procedure.** A partial check or adjustment is often desirable after replacing components, or to improve the adjustment of a portion of the instrument between major recalibrations. To check or adjust only part of the instrument, set the controls as given under Preliminary Control Settings and start with the nearest Equipment Required list preceding the desired portion. To prevent unnecessary recalibration of other parts of the instrument, readjust only if the tolerance given in the CHECK—part of the step is not met. If re-adjustment is necessary, also check the calibration of any steps listed in the INTERACTION—part of the step.

**Complete Performance Check/Adjustment.** To completely check and adjust all parts of this instrument, perform both Part I and II. Start the complete procedure by adjusting the trigger system as given in the adjustment procedure and follow this with the Performance Check for the same portion (e.g., Trigger System Check). This method will assure that the instrument is both correctly adjusted and performing within all given specifications.

*NOTE*

*All waveforms shown in this section were taken with a TEKTRONIX Oscilloscope Camera System, unless noted otherwise.*

# TEST EQUIPMENT REQUIRED

## General

The following test equipment and accessories, or its equivalent, is required for complete calibration of the 7B53A/7B53AN. Specifications given for the test equipment are the minimum necessary for accurate calibration. Therefore, some of the specifications listed here may be less precise than the actual performance capabilities of the test equipment. All test equipment is assumed to be correctly calibrated and operating within the listed specifications.

The Performance Check and Adjustment procedures are based on this recommended equipment. If other equipment is substituted, control settings or calibration setup may need to be altered to meet the requirements of the equipment used. Detailed operating instructions for the test equipment are not given in this procedure. Refer to the instruction manual for the test equipment if more information is needed.

## Special Calibration Fixtures

Special TEKTRONIX calibration fixtures are used in this procedure only where they facilitate instrument calibration. These special calibration fixtures are available from Tektronix, Inc. Order by part number through your local TEKTRONIX Field Office or representative.

## Calibration Equipment Alternatives

All of the listed test equipment, or equivalent, is required to completely check and adjust this instrument. The procedures are based on the first item of equipment given as an example of applicable equipment. When other equipment is substituted, control settings or setup might need to be altered to meet the requirements. If the exact item given as an example in the Test Equipment list is not available, first check the specification column to see if any other equipment might suffice. Then check the Usage column to see what this item is used for. If used for a check or adjustment which is of little or no importance to your measurement requirements, the item and corresponding step(s) can be deleted. For example, if only a Performance Check is to be performed, the square-wave generator can be omitted.

TEST EQUIPMENT

| Description | Minimum Specifications | Usage | Examples of Applicable Test Equipment |
|---|---|---|---|
| 1. Oscilloscope | 7000-series oscilloscope mainframe. Bandwidth capability of 100 megahertz required. | Used throughout procedure to provide display. | a. TEKTRONIX 7603 Oscilloscope.<br><br>b. Any TEKTRONIX 7000-series oscilloscope with 100-megahertz bandwidth (combined with amplifier unit). |
| 2. Amplifier Unit | 7A-series amplifier unit. Combined bandwidth of amplifier unit and oscilloscope, 100 megahertz. | Used throughout procedure to provide vertical input to oscilloscope system. | a. TEKTRONIX 7A16A Amplifier.<br><br>b. TEKTRONIX 7A11 Amplifier. |
| 3. Medium-frequency signal generator | Frequency range, 50 kilohertz and 10 megahertz to 100 megahertz; output amplitude, variable from 15 to 500 millivolts into 50 ohms. | Internal and external triggering checks. Main and delayed trigger DC balance adjustments. | a. TEKTRONIX Type SG 503 Signal Generator.[1]<br><br>b. General Radio Model 1310B Oscillator with General Radio Type 274 QBJ Adapter to provide BNC output (can be used for trigger DC balance adjustments only). |
| 4. Low-frequency sine-wave generator | Frequency range, variable from 30 hertz to two megahertz; output amplitude, variable from 30 millivolts to four volts into 50 ohms and to 30 volts into one megohm. | Main and delayed triggering checks. Check trigger modes. Check external amplifier gain and bandwidth. | a. General Radio Model 1310B Oscillator with General Radio Type 274 QBJ Adapter to provide BNC output. |
| 5. Square-wave generator | Amplitude, 500 millivolts into 50 ohms; repetition rate, one kilohertz; risetime, less than 12 nanoseconds into 50 ohms. | Main and delayed external trigger input compensation adjustments. | a. TEKTRONIX Type PG 506 Generator.[1] |
| 6. Time-mark generator | Marker or sine-wave outputs, from five seconds to five nanoseconds; marker accuracy, within 0.1%; amplitude, at least 0.3 volt into 50 ohms. | Sweep timing checks and adjustments. Sweep delay checks and adjustments. | a. TEKTRONIX Type TG 501 Time-Mark Generator.[1]<br><br>b. TEKTRONIX 2901 Time-Mark Generator. |
| 7. 10X voltage probe | Compatible with 7A-series amplifier unit. Combined risetime of probe, amplifier, and oscilloscope must be less than 3.5 nanoseconds. | Check line triggering. External trigger input compensation adjustments. Main and delayed-sweep offset adjustments. | a. TEKTRONIX P6053 Probe.<br><br>b. TEKTRONIX P6054 Probe. |
| 8. Cable | Impedance, 50 ohms; type, RG-58/U; length, 18 inches; connectors, BNC. | Used throughout procedure for signal interconnection. | a. TEKTRONIX Part No. 012-0076-00. |
| 9. Cable (two required) | Impedance, 50 ohms; type, RG-58/U; length, 42 inches; connectors, BNC. | Used throughout procedure for signal interconnection. | a. TEKTRONIX Part No. 012-0057-01. |
| 10. Plug-in extender | Rigid extender for 7000-series plug-in units. | Used throughout adjustment procedure to provide access to internal adjustments and test points. | a. TEKTRONIX Part No. 067-0589-00. |
| 11. T connector | Connectors, BNC. | External trigger checks. | a. TEKTRONIX Part No. 103-0030-00. |

[1] Requires TM 500-Series Power Module.

TEST EQUIPMENT (cont)

| Description | Minimum Specifications | Usage | Examples of Applicable Test Equipment |
|---|---|---|---|
| 12. Termination | Impedance, 50 ohms; accuracy, ±2%; connectors, BNC. | Used throughout procedures to terminate 50-ohm BNC cables. | a. TEKTRONIX Part No. 011-0049-01. |
| 13. Adapter | Connectors, GR874 to BNC female. | Internal and external triggering checks. Main and delayed-trigger DC balance adjustments. External trigger input compensation adjustments. | a. TEKTRONIX Part No. 017-0063-00. |
| 14. Input RC Normalizer | Time constant, one megohm times 20 picofarads; connectors, BNC. | External trigger input compensation adjustments. | a. TEKTRONIX Calibration Fixture 067-0538-00. |
| 15. Attenuator | Impedance, 50 ohms; attenuation, 10X; type, feedthrough; accuracy, ±3%; connectors, BNC. | External trigger input compensation adjustments. | a. TEKTRONIX Part No. 011-0059-01. |
| 16. Screwdriver | Three-inch shaft; 3/32-inch bit. | Used to adjust variable resistors. | a. Xcelite R-3323. |
| 17. Low-capacitance screwdriver | 1 1/2-inch shaft. | Used to adjust variable capacitors. | a. TEKTRONIX Part No. 003-0000-00. |
| 18. VOM | 0-10 volt scale | Used for sweep offset and trigger null adjustment. | a. TEKTRONIX Type DM 501 Digital Multimeter.[1]<br>b. Simpson 262.<br>c. Tripplet 630NA. |

## Preliminary Control Settings

Set test equipment and 7B53A/7B53AN controls as follows (for both Performance Check and Adjustment procedure):

### 7A16A

| | |
|---|---|
| Position | Midrange |
| AC-DC-GND | AC |
| Polarity | +UP |
| Volts/Div | 50 mV |
| Variable Volts/Div | (CAL-IN) |

### 7603 Oscilloscope

| | |
|---|---|
| Vert Mode | Left |
| Trig Source | Vert Mode |
| Focus | Adjust for well-defined display |
| Intensity | Midrange |
| Graticule Illum | As desired |

### 7B53A/7B53AN

| | |
|---|---|
| MAIN TRIGGERING | |
| SLOPE | (+) |
| MODE | AUTO |
| COUPLING | AC |
| SOURCE | INT |
| DLY'D TRIG LEVEL | RUNS AFTER DLY TIME |
| SLOPE | + |
| COUPLING | AC |
| SOURCE | INT |
| POSITION | Midrange |
| MAG | X1 |
| TIME/DIV OR DLY'D TIME | 20 μs |
| DLY'D Time/ Division | 20 μs (press in for MAIN SWP Display Mode) |
| VARIABLE | CAL |
| Variable Selector | MAIN |
| DELAY TIME MULT | 1.00 |

[1] Requires TM 500-Series Power Module.

# PART I—PERFORMANCE CHECK

## Introduction

The following procedure checks the performance of the 7B53A/7B53AN without removing the side-covers or making internal adjustments. All tolerances given in this procedure are based on the Specification section of the 7B53A/7B53AN Operators Manual.

## INDEX TO PART I—PERFORMANCE CHECK


### Trigger System Check

1. Check Main and Delayed Internal Triggering Operation — Page 4-5

2. Check Main and Delayed External Triggering Operation — Page 4-6

3. Check Main and Delayed Internal Trigger Jitter — Page 4-7

4. Check Main and Delayed Low-Frequency Triggering Operation — Page 4-8

5. Check Main Triggering AC High-Frequency Reject Operation — Page 4-8

6. Check Main Triggering AC Low-Frequency Reject Operation — Page 4-9

7. Check Main and Delayed Trigger Level and Slope Operation — Page 4-9

8. Check Main Trigger Modes — Page 4-10

9. Check Line Triggering Operation — Page 4-11

### Horizontal System Check

10. Check Main and Delayed Sweep Timing and Linearity — Page 4-12

11. Check Main and Delayed Sweep Magnifier Accuracy and Linearity — Page 4-13

12. Check Delay Time Multiplier Accuracy — Page 4-15

13. Check Delay Time Jitter — Page 4-16

14. Check Mixed Sweep Operation — Page 4-17

15. Check Main and Delayed Sweep Variable Control Operation — Page 4-17

16. Check External Amplifier Gain — Page 4-18

17. Check External Horizontal Bandwidth — Page 4-18

### Output Signals Check

18. Check Delayed Sweep Gate Output — Page 4-19


## Preliminary Procedure for Performance Check

*NOTE*

*The performance of this instrument can be checked at any temperature within 0°C to +50°C range unless otherwise stated.*

1. Install the 7B53A/7B53AN into the right compartment of the indicator oscilloscope.

2. Install the 7A16A Vertical Amplifier unit into the left vertical compartment.

3. Turn on the oscilloscope and allow at least 20 minutes warmup before proceeding with the Performance Check.

4. Set the equipment controls as given in this section under Preliminary Control Settings.

## TRIGGER SYSTEM CHECK

### Equipment Required

1. 7603 Oscilloscope
2. 7A16A Amplifier Unit
3. 10X probe
4. Medium-frequency signal generator
5. Low-frequency sine-wave generator
6. GR to BNC female adapter
7. BNC T-connector
8. 42-inch 50-ohm BNC cable
9. 18-inch 50-ohm BNC cable
10. 50-ohm BNC termination

### Control Settings

Set the controls as given under Preliminary Control Settings.

### 1. Check Main and Delayed Internal Triggering Operation

a. Connect the output of the medium-frequency signal generator to the 7A16A Input with a GR-to-BNC female adapter, 50-ohm BNC cable, and 50-ohm BNC termination.

b. Change the following control settings:

| | |
|---|---|
| MAIN TRIGGERING LEVEL | Set for stable main sweep display |
| TIME/DIV OR DLY TIME | .1 μs |
| DLY'D Time/ Division | .1 μs (press in for MAIN SWP Display Mode) |

c. Set the medium-frequency signal generator for a 0.3-division display at 10 megahertz.

d. Change the MAIN TRIGGERING MODE switch to NORM.

e. CHECK—Stable CRT display can be obtained with the MAIN TRIGGERING COUPLING switch set to AC, AC LF REJ, and DC for both the positive and negative positions of the MAIN TRIGGERING SLOPE switch (MAIN TRIGGERING LEVEL control may be adjusted as necessary to obtain a stable main sweep display i.e., TRIG'D light on).

f. Change the following control settings:

| | |
|---|---|
| MAIN TRIGGERING COUPLING | AC |
| LEVEL | Set for stable main sweep display |
| TIME/DIV OR DLY TIME | .2 μs |
| DLY'D Time/ Division | .1 μs (press in for DLY'D SWP Display Mode) |
| DLY'D TRIG LEVEL | DLY'D SWP TRIGGERABLE |

g. CHECK—Stable CRT display can be obtained with DLY'D TRIG COUPLING switch set to AC and DC for both the + and – SLOPE (DLY'D TRIG LEVEL control may be adjusted as necessary to obtain a stable delayed sweep display).

h. Change the following control settings:

| | |
|---|---|
| MAIN TRIGGERING MODE | AUTO |
| TIME/DIV OR DLY TIME | .05 μs |
| DLY'D Time/ Division | .05 μs |
| MAG | X10 |

i. Set the medium-frequency generator for a 1.5-division display at 100 megahertz.

j. Set the MAIN TRIGGERING MODE switch to NORM.

k. CHECK—Stable CRT display can be obtained with the COUPLING switch for MAIN TRIGGERING set to AC, AC LF REJ, and DC (MAIN TRIGGERING LEVEL control may be adjusted as necessary to obtain a stable display).

l. Change the following control settings:

| | |
|---|---|
| MAIN TRIGGERING | |
| MODE | AUTO |
| COUPLING | AC |
| LEVEL | Set for a stable main sweep display |
| TIME/DIV OR DLY TIME | .1 μs |
| DLY'D Time/ Division | .05 μs (press in for DLY'D SWP Display Mode) |

m. CHECK—Stable CRT display can be obtained with the DLY'D TRIG COUPLING switch set to AC and DC for the + and — SLOPE (DLY'D TRIG LEVEL control may be adjusted as necessary to obtain stable display).

n. Disconnect all test equipment.

## 2. Check Main and Delayed External Triggering Operation

a. Change the following control settings:

| | |
|---|---|
| MAIN TRIGGERING | |
| COUPLING | AC |
| SOURCE | EXT |
| DLY'D TRIG | |
| SOURCE | EXT |
| COUPLING | AC |
| MAG | X1 |
| TIME/DIV OR DLY TIME | .1 μs |
| DLY'D Time/ Division | .1 μs (press in for MAIN SWP Display Mode) |

b. Connect the medium-frequency signal generator to the 7A16A Input with a GR-to-BNC female adapter, 50-ohm BNC cable, and BNC T-connector. Connect the output of the T-connector to the 7B53A/7B53AN MAIN TRIG IN connector with a 50-ohm BNC cable and 50-ohm BNC termination.

c. Set the medium-frequency signal generator for a two-division display (100 millivolts) at 10 megahertz.

d. CHECK—Stable CRT display can be obtained with the MAIN TRIGGERING COUPLING switch set to AC, AC LF REJ, and DC for both the + and — SLOPE (MAIN TRIGGERING LEVEL control may be adjusted as necessary to obtain a stable display).

e. Disconnect the 50-ohm cable and termination from the MAIN TRIG IN connector and connect them to the DLY'D TRIG IN connector.

f. Change the following control settings:

| | |
|---|---|
| MAIN TRIGGERING | |
| SOURCE | INT |
| COUPLING | AC |
| LEVEL | Set for stable main sweep display |
| TIME/DIV OR DLY TIME | .1 μs |
| DLY'D Time/ Division | .05 μs (press in for DLY'D SWP Display Mode) |
| DLY'D TRIG LEVEL | RUNS AFTER DLY TIME |

g. Set the medium-frequency signal generator for a two-division display (100 millivolts) at 10 megahertz.

h. Rotate the DLY'D TRIG LEVEL control to the DLY'D SWP TRIGGERABLE position.

i. CHECK—Stable CRT display can be obtained with the DLY'D TRIG COUPLING switch set to AC and DC for both the + and — SLOPE (DLY'D TRIG LEVEL control may be adjusted as necessary to obtain a stable delayed sweep display).

j. Disconnect the 50-ohm cable and termination from the DLY'D TRIG IN connector and connect it to the MAIN TRIG IN connector.

k. Change the following control settings:

| | **7B53A/7B53AN** |
|---|---|
| MAIN TRIGGERING | |
| SOURCE | EXT |

| | |
|---|---|
| TIME/DIV OR DLY TIME | .1 μs |
| DLY'D Time/ Division | .1 μs (press in for MAIN SWP Display Mode) |
| DLY'D TRIG LEVEL | RUNS AFTER DLY TIME |

l. Set the 7A16A Volts/Division switch to .1 V and set the medium-frequency signal generator for a five-division display (500 millivolts) at 10 megahertz. Rotate the MAIN TRIGGERING LEVEL control for a stable main sweep display.

m. Without changing the output amplitude, increase the output frequency of the generator to 100 megahertz.

n. Press and release the MAG switch to X10.

o. CHECK—Stable CRT display can be obtained with the MAIN TRIGGERING COUPLING switch set to AC, AC LF REJ, and DC for both the + and — SLOPE (MAIN TRIGGERING LEVEL control may be adjusted as necessary to obtain a stable display).

p. Disconnect the 50-ohm cable and termination from the MAIN TRIG IN connector and connect it to the DLY'D TRIG IN connector.

q. Change the following control settings:

| | |
|---|---|
| MAIN TRIGGERING SOURCE | INT |
| LEVEL | Set for stable display |
| TIME/DIV OR DLY TIME | .1 μs |
| DLY'D Time/ Division | .05 μs (press in for the DLY'D SWP Display Mode) |
| MAG | X1 |

r. Set the medium-frequency signal generator for five divisions (500 millivolts) at 10 megahertz.

s. Without changing the amplitude, increase the output frequency to 100 megahertz.

t. Change the following control settings:

| | |
|---|---|
| MAG | X10 |
| DLY'D TRIG LEVEL | DLY'D SWP TRIGGERABLE |

u. CHECK—Stable CRT display can be obtained with the DLY'D TRIG COUPLING switch set to AC and DC for both the + and — SLOPE (DLY'D TRIG LEVEL control may be adjusted as necessary to obtain a stable delayed sweep display).

v. Disconnect all test equipment.

## 3. Check Main and Delayed Internal Trigger Jitter

a. Connect the medium-frequency signal generator to the 7A16A Input with a GR-to-BNC female adapter, 50-ohm BNC cable, and 50-ohm BNC termination.

b. Change the following control settings:

| | |
|---|---|
| MAIN TRIGGERING LEVEL | Set for stable display (TRIG'D light on) |
| DLY'D TRIG SOURCE | INT |
| COUPLING | AC |
| LEVEL | RUNS AFTER DLY TIME |

c. Set the medium-frequency signal generator for a 1.5 division display at 75 megahertz.

d. Rotate the DLY'D TRIG LEVEL control to DLY'D SWP TRIGGERABLE and rotate control for a stable display.

e. CHECK—CRT display for no more than 0.2 division (one-nanosecond) of jitter. Disregard any slow drift.

f. Change the following control settings:

| | |
|---|---|
| TIME/DIV OR DLY TIME | .05 μs |
| DLY'D Time/ Division | .05 μs (press in for MAIN SWP Display Mode) |
| MAIN TRIGGERING LEVEL | Set for stable display |

g. CHECK—CRT Display for less than 0.2 division (one-nanosecond) of jitter. Disregard any slow drift.

h. Disconnect all test equipment.

## 4. Check Main and Delayed Low-Frequency Triggering Operation

a. Connect the low-frequency sine-wave generator to the 7A16A Input with a 50-ohm BNC cable and BNC T-connector. Connect the output of the BNC T-connector to the MAIN TRIG IN connector with a 50-ohm BNC cable and a 50-ohm BNC termination.

b. Change the following control settings:

| | |
|---|---|
| TIME/DIV OR | |
| DLY TIME | 10 ms |
| DLY'D Time/ | |
| Division | 10 ms (press in for MAIN SWP Display Mode) |
| MAG | X1 |

c. Set the low-frequency sine-wave generator for a 0.3-division display at 30 hertz.

d. CHECK—Stable CRT display can be obtained with the MAIN TRIGGERING COUPLING switch set to AC, AC HF REJ, and DC for both the + and — SLOPE (MAIN TRIGGERING LEVEL control may be adjusted as necessary to obtain a stable display).

e. Change the following controls settings:

| | |
|---|---|
| MAIN TRIGGERING | |
| COUPLING | AC |
| LEVEL | Set for stable main sweep display |
| TIME/DIV OR | |
| DLY TIME | 10 ms |
| DLY'D Time/ | |
| Division | 5 ms (press in for DLY'D SWP Display Mode) |
| DLY'D TRIG | |
| LEVEL | DLY'D SWP TRIGGERABLE |

f. CHECK—Stable display can be obtained with the DLY'D TRIG COUPLING switch set to AC and DC for both the + and — SLOPE (DLY'D TRIG LEVEL control may be adjusted as necessary to obtain a stable delayed sweep display).

g. Change the following control settings:

| | |
|---|---|
| MAIN TRIGGERING | |
| MODE | AUTO |
| SOURCE | EXT |
| TIME/DIV OR | |
| DLY TIME | 10 ms |
| DLY'D Time/ | |
| Division | 10 ms (press in for MAIN SWP Display Mode) |
| DLY'D TRIG | |
| SOURCE | EXT |

h. Set the low-frequency sine-wave generator for a one-division display (100 millivolts) at 30 hertz; then return the MAIN TRIGGERING MODE switch to NORM.

i. CHECK—Stable CRT display can be obtained with the MAIN TRIGGERING COUPLING switch set to AC, AC HF REJ, and DC for both the + and — SLOPE (MAIN TRIGGERING LEVEL control may be adjusted as necessary to obtain a stable display).

j. Change the following control settings:

| | |
|---|---|
| MAIN TRIGGERING | |
| COUPLING | AC |
| SOURCE | INT |
| LEVEL | Set for stable display |
| TIME/DIV OR | |
| DLY TIME | 10 ms |
| DLY'D Time/ | |
| Division | 5 ms (press in for DLY'D SWP Display Mode) |

k. Disconnect the 50-ohm cable and termination from the MAIN TRIG IN connector and place it on the DLY'D TRIG IN connector.

l. CHECK—Stable CRT display can be obtained with the DLY'D TRIG COUPLING switch set to AC and DC for both the + and — SLOPE (DLY'D TRIG LEVEL control may be adjusted as necessary for a stable display).

## 5. Check Main Triggering AC High-Frequency Reject Operation

a. Change the following control settings:

| | |
|---|---|
| MAIN TRIGGERING | |
| MODE | AUTO |
| COUPLING | AC HF REJ |
| TIME/DIV OR | |
| DLY TIME | 20 μs |
| DLY'D Time/ | |
| Division | 20 μs (press in for MAIN SWP Display Mode) |

b. Set the low-frequency sine-wave generator for a 0.3-division display at 50 kilohertz; then return the MAIN TRIGGERING MODE switch to NORM.

c. CHECK—Stable CRT display can be obtained with the MAIN TRIGGERING LEVEL control.

d. Without changing the output amplitude, set the low-frequency sine-wave generator to one-megahertz.

e. Press and release MAG switch to X10 position.

f. CHECK—Stable CRT display cannot be obtained at any setting of the MAIN TRIGGERING LEVEL control.

## 6. Check Main Triggering AC Low-Frequency Reject Operation

a. Change the following control settings:

| | |
|---|---|
| MAIN TRIGGERING | |
| MODE | AUTO |
| COUPLING | AC LF REJ |
| MAG | X1 |

b. Set the low-frequency sine-wave generator for a 0.3-division display at 30 kilohertz; then return the MAIN TRIGGERING MODE switch to NORM.

c. CHECK—Stable CRT display can be obtained with the MAIN TRIGGERING LEVEL control.

d. Without changing the output amplitude, set the low-frequency sine-wave generator to 60 hertz.

e. Set the TIME/DIV OR DLY TIME and DLY'D Time/Division switches to 2 ms (MAIN SWP Display Mode).

f. CHECK—Stable CRT display cannot be obtained at any setting of the MAIN TRIGGERING LEVEL control.

## 7. Check Main and Delayed Trigger Level and Slope Operation

a. Change the following control settings:

| 7A16A | |
|---|---|
| Volts/Div | 1 V |

| 7B53A/7B53AN | |
|---|---|
| MAIN TRIGGERING | |
| MODE | AUTO |
| COUPLING | DC |
| TIME/DIV OR DLY TIME | 1 ms |
| DLY'D Time/Division | .5 ms (press in for DLY'D SWP Display Mode) |
| DLY'D TRIG LEVEL | RUNS AFTER DLY TIME |

b. Remove the 50-ohm termination from the 7B53A/7B53AN DLY'D TRIG IN connector; then reconnect the cable.

c. Set the low-frequency sine-wave generator for the three-divisions of one kilohertz signal.

d. Rotate the DLY'D TRIG LEVEL control to the DLY'D SWP TRIGGERABLE position.

e. CHECK—Rotate the DLY'D TRIG LEVEL control throughout its range and check that display can be triggered at any point along the positive slope of the waveform. Check that no display exists when the LEVEL control is rotated to either extreme.

f. Set the DLY'D TRIG SLOPE switch to —.

g. CHECK—Rotate the DLY'D TRIG LEVEL control throughout its range and check that display can be triggered at any point along the negative slope of the waveform (indicates DLY'D TRIG LEVEL control range at least + and —1.5 volts). Check that no display exists when the LEVEL control is rotated to either extreme.

h. Change the following control settings:

| | |
|---|---|
| MAIN TRIGGERING | |
| MODE | NORM |
| SOURCE | EXT |
| TIME/DIV OR DLY TIME | 1 ms |
| DLY'D Time/Division | 1 ms (press in for MAIN SWP Display Mode) |

i. Disconnect the cable from the DLY'D TRIG IN connector and connect it to the MAIN TRIG IN connector.

j. CHECK—Rotate the MAIN TRIGGERING LEVEL control and check that all levels can be selected as the main sweep trigger point for both the + and — SLOPE (indicates MAIN TRIGGERING LEVEL control range of at least + and —1.5 volts). Check that no display exists when the LEVEL control is rotated to either extreme.

k. Change the following control setting:

**7A16A**

| | |
|---|---|
| Volts/Div | 5 V |

**7B53A/7B53AN**

| | |
|---|---|
| MAIN TRIGGERING SOURCE | EXT ÷10 |

l. Set the low-frequency sine-wave generator for six-divisions of one-kilohertz signal.

m. CHECK—Rotate to the MAIN TRIGGERING LEVEL control and check that all levels can be selected as the main sweep trigger point for both the + and — SLOPE (indicates MAIN TRIGGERING LEVEL control range of at least + and — 15 volts). Check that no display exists when the LEVEL control is rotated to either extreme.

n. Disconnect all test equipment.

## 8. Check Main Trigger Modes

a. Set the following control settings:

**7A16A**

| | |
|---|---|
| Volts/Div | 1 V |

**7B53A/7B53AN**

| | |
|---|---|
| MAIN TRIGGERING | |
| MODE | AUTO |
| COUPLING | AC |
| SOURCE | INT |
| TIME/DIV OR DLY TIME | 20 μs |
| DLY'D Time/ Division | 20 μs (press in for MAIN SWP Display Mode) |

b. Connect the low-frequency sine-wave generator to the 7A16A Input with a 50-ohm BNC cable and 50-ohm BNC termination.

c. Set the low-frequency sine-wave generator for a four-division display at 50 kilohertz.

d. Rotate the MAIN TRIGGERING LEVEL control for a free-running display.

e. Set the MAIN TRIGGERING MODE switch to NORM.

f. CHECK—CRT for no display.

g. Set the MODE switch to AUTO. Rotate the MAIN TRIGGERING LEVEL control so that the display is just triggered.

h. Set the MAIN TRIGGERING MODE switch to NORM.

i. CHECK—CRT for triggered display.

j. Set the low-frequency sine-wave generator for a four-division display at 500 hertz.

k. Change the following control settings:

| | |
|---|---|
| TIME/DIV OR DLY TIME | 2 ms |
| DLY'D Time/ Division | 2 ms (press in for MAIN SWP Display Mode) |
| MAIN TRIGGERING | |
| LEVEL | Set for a stable display (TRIG'D light on) |
| MODE | SINGLE SWP |

l. CHECK—CRT for no display.

m. Press the MAIN TRIGGERING RESET button.

n. CHECK—CRT for one sweep as RESET button is pressed (Intensity control on the indicator oscilloscope may need to be varied in order that a single sweep display can be observed).

o. Remove the signal from the 7A16A Input, then press the RESET button.

p. CHECK—CRT for no display and READY light on.

q. Reconnect the signal to the 7A16A Input.

r. CHECK—That one sweep occurs as the signal is applied to the 7A16A and that the READY light is out after the completion of that sweep.

s. Disconnect all test equipment.

## 9. Check Line Triggering Operation

a. Connect the 10X probe to the 7A16A Input.

b. Change the following control settings:

| | 7A16A |
|---|---|
| Volts/Div | 5 V |

| | 7B53A/7B53AN |
|---|---|
| MAIN TRIGGERING | |
| SOURCE | LINE |
| MODE | NORM |
| TIME/DIV OR | |
| DLY TIME | 5 ms |
| DLY'D Time/ | |
| Division | 5 ms (press in for MAIN SWP Display Mode) |

c. Connect the X10 probe tip to the same line-voltage source which is connected to the oscilloscope.

d. CHECK—For a stable CRT display that is triggered on the correct slope.

e. Disconnect all test equipment.

## HORIZONTAL SYSTEM CHECK

### Equipment Required

1. 7603 Oscilloscope
2. 7A16A Amplifier Unit
3. Time-mark generator
4. Low-frequency sine-wave generator
5. 42-inch 50-ohm cable
6. 50-ohm BNC termination

### Control Settings

Set the controls as given under Preliminary Control Settings.

*NOTE*

*The tolerances given in steps 10 and 11 are for an ambient temperature range of +15°C to +35°C. If outside this range, see Specifications in the 7B53A/7B53AN Operators manual.*

### 10. Check Main and Delayed Sweep Timing Accuracy and Linearity

a. Connect the marker output of the time-mark generator to the 7A16A Input with the 50-ohm BNC cable and 50-ohm BNC termination.

b. Change the following control settings:

**7A16A**

| | |
|---|---|
| Volts/Div | .5 V |

**7B53A/7B53AN**

| | |
|---|---|
| MAIN TRIGGERING | |
| MODE | NORM |
| LEVEL | Set for stable display (TRIG'D light on). |

c. CHECK—Using the TIME/DIV OR DLY TIME switch settings and the time-mark generator settings given in Table 4-1, that the main sweep timing over the middle eight graticule divisions is within the tolerances in Table 4-1.

**TABLE 4-1**

**Main Sweep Timing**

*NOTE*

*Main sweep timing must be checked when operating in the MAIN SWP or INTEN Display Modes.*

| 7B53A/7B53AN TIME/DIV or DLY TIME | Time Markers | CRT Display (marker/ division) | Tolerance MAIN SWP |
|---|---|---|---|
| .05 μs | 50 ns | 1 (cycle) | ±0.24 division |
| .1 μs | .1 μs | 1 | |
| .2 μs | .1 μs | 2 | |
| .5 μs | .5 μs | 1 | ±0.16 division |
| 1 μs | 1 μs | 1 | |
| 2 μs | 1 μs | 2 | |
| 5 μs | 5 μs | 1 | |
| 10 μs | 10 μs | 1 | |
| 20 μs | 10 μs | 2 | |
| 50 μs | 50 μs | 1 | |
| .1 ms | .1 ms | 1 | |
| .2 ms | .1 ms | 2 | |
| .5 ms | .5 ms | 1 | |
| 1 ms | 1 ms | 1 | |
| 2 ms | 1 ms | 2 | |
| 5 ms | 5 ms | 1 | |
| 10 ms | 10 ms | 1 | |
| 20 ms | 10 ms | 2 | |
| 50 ms | 50 ms | 1 | |
| .1 s | .1 s | 1 | ±0.24 division |
| .2 s | .1 s | 2 | |
| .5 s | .5 s | 1 | |
| 1 s | 1 s | 1 | |
| 2 s | 1 s | 2 | |
| 5 s | 5 s | 1 | |

d. CHECK—Using the time-mark generator settings and the TIME/DIV OR DLY TIME and DLY'D Time/Division

switch settings given in Table 4-2, that the delayed sweep timing over the middle eight graticule divisions is within the tolerances in Table 4-2.

**TABLE 4-2**

**Delayed Sweep Timing**

*NOTE*

*Delayed sweep timing must be checked when operating in the DLY'D SWP Display Mode.*

| 7B53A/7B53AN | | | | |
|---|---|---|---|---|
| TIME/DIV or DLY TIME | DLY'D Time/ Division (press in) | Time Markers | CRT Display (markers/ division) | Tolerance DLY'D SWP |
| .1 μs | .05 μs | 50 ns | 1 (cycle) | ±0.32 division |
| .2 μs | .1 μs | .1 μs | 1 | |
| .5 μs | .2 μs | .1 μs | 2 | |
| 1 μs | .5 μs | .5 μs | 1 | |
| 2 μs | 1 μs | 1 μs | 1 | |
| 5 μs | 2 μs | 1 μs | 2 | |
| 10 μs | 5 μs | 5 μs | 1 | |
| 20 μs | 10 μs | 10 μs | 1 | |
| 50 μs | 20 μs | 10 μs | 2 | |
| .1 ms | 50 μs | 50 μs | 1 | ±0.24 division |
| .2 ms | .1 ms | .1 ms | 1 | |
| .5 ms | .2 ms | .1 ms | 2 | |
| 1 ms | .5 ms | .5 ms | 1 | |
| 2 ms | 1 ms | 1 ms | 1 | |
| 5 ms | 2 ms | 1 ms | 2 | |
| 10 ms | 5 ms | 5 ms | 1 | |
| 20 ms | 10 ms | 10 ms | 1 | |
| 50 ms | 20 ms | 10 ms | 2 | |
| .1 s | 50 ms | 50 ms | 1 | |
| .2 s | .1 s | .1 s | 1 | ±0.32 division |
| .5 s | .2 s | .1 s | 2 | |
| 1 s | .5 s | .5 s | 1 | |

e. Set the time-mark generator for one-millisecond markers.

f. Change the following control settings:

| | |
|---|---|
| TIME/DIV OR DLY TIME | 2 ms |
| DLY'D Time/ Division | 1 ms (press in for DLY'D SWP Display Mode) |

g. Position the second marker to the second graticule line.

h. CHECK—Fourth marker within 0.12 division (6%) of the fourth vertical line.

i. Position the third marker to the third vertical line.

j. CHECK—Fifth marker within 0.12 division of the fifth vertical line.

k. Continue this check for each two-division portion of the sweep that is within the center eight divisions of the graticule.

l. Set the TIME/DIV OR DLY TIME and DLY'D Time/Division switches to 1 ms (MAIN SWP Display Mode).

m. CHECK—Repeat sweep linearity check given in steps g through k. Check for main sweep linearity within 0.1 division (5%).

n. CALIBRATION—See step 4 of adjustment procedure.

## 11. Check Main and Delayed Sweep Magnifier Accuracy and Linearity

a. Change the following control settings:

| | |
|---|---|
| MAG | X10 |
| POSITION | Centered |

b. CHECK—Using the TIME/DIV OR DLY TIME switch and the time-mark generator settings given in Table 4-3, the main sweep magnified timing from the 10th to the 90th divisions of the total magnified display.

c. Rotate the MAIN TRIGGERING LEVEL control for a stable display. Using the TIME/DIV OR DLY TIME settings, DLY'D Time/Division settings, and time-mark generator settings given in Table 4-4, check the delayed sweep magnified timing from the 10th to the 90th divisions of the total magnified display.

d. Change the following control settings:

| | |
|---|---|
| TIME/DIV OR DLY TIME | 2 ms |
| DLY'D Time/ Division | 1 ms (press in for DLY'D SWP Display Mode) |

e. Set the time-mark generator for 0.1-millisecond markers.

**TABLE 4-3**

**Main Sweep Magnifier Accuracy**

*NOTE*

*Main sweep magnifier accuracy must be checked when operating in the MAIN SWP or INTEN Display Modes.*

| 7B53A/7B53AN TIME/DIV OR DLY TIME | Time-Mark Generator | CRT Display Markers/Div | Tolerance SWP |
|---|---|---|---|
| .05 μs | 5 ns | 1 (cycle) | ±0.28 division |
| .1 μs | 10 ns | 1 (cycle) | |
| .2 μs | 10 ns | 2 (cycles) | |
| .5 μs | 50 ns | 1 (cycle) | ±0.2 division |
| 1 μs | .1 μs | 1 | |
| 2 μs | .1 μs | 2 | |
| 5 μs | .5 μs | 1 | |
| 10 μs | 1 μs | 1 | |
| 20 μs | 1 μs | 2 | |
| 50 μs | 5 μs | 1 | |
| .1 ms | 10 μs | 1 | |
| .2 ms | 10 μs | 2 | |
| .5 ms | 50 μs | 1 | |
| 1 ms | .1 ms | 1 | |
| 2 ms | .1 ms | 2 | |
| 5 ms | .5 ms | 1 | |
| 10 ms | 1 ms | 1 | |
| 20 ms | 1 ms | 2 | |
| 50 ms | 5 ms | 1 | |
| .1 s | 10 ms | 1 | ±0.28 division |
| .2 s | 10 ms | 2 | |
| .5 s | 50 ms | 1 | |
| 1 s | .1 s | 1 | |
| 2 s | .1 s | 2 | |
| 5 s | .5 s | 1 | |

f. Position the second displayed marker to the second vertical line of the graticule.

g. CHECK—Fourth displayed marker is within 0.12 division (6%) of the fourth vertical line.

h. Position the third displayed marker to the third vertical line.

i. CHECK—Fifth displayed marker is within 0.12 division of the fifth vertical line.

**TABLE 4-4**

**Delayed Sweep Magnifier Accuracy**

*NOTE*

*Delayed Sweep Magnifier Accuracy must be checked when operating in the DLY'D SWP Display Mode.*

| 7B53A/7B53AN TIME/DIV OR DLY TIME | 7B53A/7B53AN DLY'D Time/ Division (press in) | Time-Mark Generator | CRT Display Markers/Div | Tolerance |
|---|---|---|---|---|
| .1 μs | .05 μs | 5 ns | 1 (cycle) | ±0.36 division |
| .2 μs | .1 μs | 10 ns | 1 (cycle) | |
| .5 μs | .2 μs | 10 ns | 2 (cycles) | |
| 1 μs | .5 μs | 50 ns | 1 (cycle) | ±0.28 division |
| 2 μs | 1 μs | .1 μs | 1 | |
| 5 μs | 2 μs | .1 μs | 2 | |
| 10 μs | 5 μs | .5 μs | 1 | |
| 20 μs | 10 μs | 1 μs | 1 | |
| 50 μs | 20 μs | 1 μs | 2 | |
| .1 ms | 50 μs | 5 μs | 1 | |
| .2 ms | .1 ms | 10 μs | 1 | |
| .5 ms | .2 ms | 10 μs | 2 | |
| 1 ms | .5 ms | 50 μs | 1 | |
| 2 ms | 1 ms | .1 ms | 1 | |
| 5 ms | 2 ms | .1 ms | 2 | |
| 10 ms | 5 ms | .5 ms | 1 | |
| 20 ms | 10 ms | 1 ms | 1 | |
| 50 ms | 20 ms | 1 ms | 2 | |
| .1 s | 50 ms | 5 ms | 1 | |
| .2 s | .1 s | 10 ms | 1 | ±0.36 division |
| .5 s | .2 s | 10 ms | 2 | |
| 1 s | .5 s | 50 ms | 1 | |

j. Continue this check for each two-division portion of the total displayed sweep within the center eight divisions of the graticule.

k. Change the following control settings:

| | |
|---|---|
| TIME/DIV OR DLY TIME | 1 ms |
| DLY'D Time/ Division | 1 ms (press in for MAIN SWP Display Mode) |

l. CHECK—Repeat magnified sweep linearity check given in steps f through j. Check for magnified main sweep linearity within 0.1 division (5%).

## 12. Check Delay Time Multiplier Differential Accuracy.

a. Set the time-mark generator for 1 ms markers.

b. Change the following control settings:

| | |
|---|---|
| MAG | X1 |
| TIME/DIV OR DLY TIME | 1 ms |
| DLY'D Time/Division | 10 μs (press in for DLY'D SWP Display Mode) |
| MAIN TRIGGERING LEVEL | Set for stable display |
| DLY'D TRIG | RUNS AFTER DLY TIME |

*NOTE*

*The following steps check delay time multiplier accuracy. Two factors must be determined: the maximum error allowable to be within the specification, and the actual error of the measurement.*

c. Rotate the DELAY TIME MULT dial to 1.00. If necessary, further rotate the dial to place a 1 ms marker on the CRT. To provide a reference point, position the 1 ms marker to graticule center with the 7B53A/7B53AN POSITION control (See Fig. 4-1). Note the exact DELAY TIME MULT dial setting.

d. Rotate the DELAY TIME MULT dial to major division points from the dial setting noted in part c (e.g. if the DELAY TIME MULT noted in part c is 0.90, major division points will be 1.90, 2.90, 3.90 through 8.90). Check and record the position of each time-marker (with respect to the reference point established at graticule center) at each major division over the center eight divisions. See Fig. 4-1 for error measurement and Fig. 4-2 for typical delay time error figures.

e. CHECK—Scan the figures recorded in step d for all difference readings over the center eight divisions (see Fig. 4-2). Find the maximum error over any one division measurement. Check that it is within the allowable error (see Fig. 4-3).

**Example.** Refer to the curve in Fig. 4-3 for the 0.5 s/DIV to 1 μs/DIV delay time range. For any one-division measurement the allowable error is 3.7%. At the same delay time range, for any five-division measurement the allowable error is 1.3%.

f. CHECK—Scan the figures recorded in step d for difference readings over the center eight divisions of display (see Fig. 4-2). Find the maximum error over any two division measurement, divide by two, and check that it is within the allowable error given in Fig. 4-3.

g. CHECK—Scan the figures recorded in step d for difference readings over the center eight divisions (see Fig. 4-2). Find the maximum error over any four division measurement, divide by four, and check that it is within the allowable error given in Fig. 4-3.

**Measurement Error as Viewed from CRT Display**

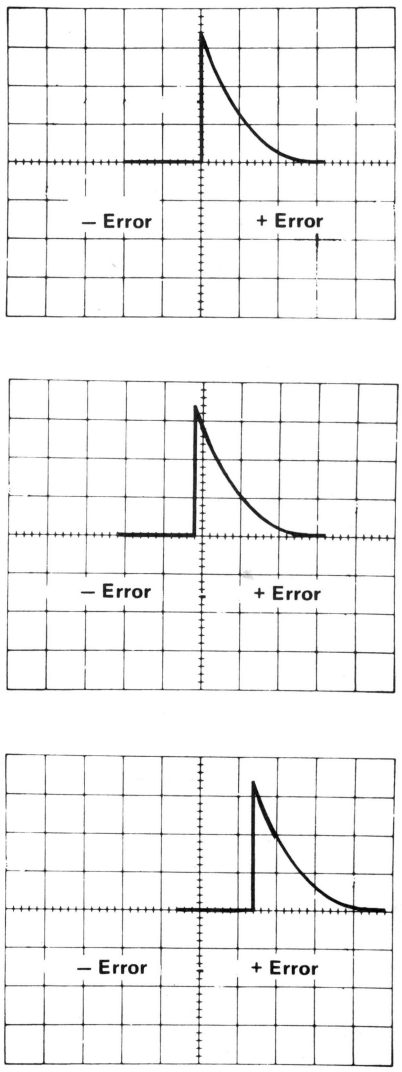


**Second time-marker positioned to graticule center for reference.**

**Time-marker showing –0.2% error.**

**Time-marker showing +1.4% error.**

**NOTE**

**With the delayed sweep rate 1/100 of the main sweep rate (e.g. TIME/DIV or DLY TIME switch at 1 ms; DLY'D Time/division switch at 10 μs), each major horizontal graticule division represents 1% error.**

**Fig. 4-1. Typical delay time error measurement.**

Recorded Error of Each Major DELAY TIME MULT Dial Division

| Typical DELAY TIME MULT Dial Setting | 0.90 | 1.90 | 2.90 | 3.90 | 4.90 | 5.90 | 6.90 | 7.90 | 8.90 |
|---|---|---|---|---|---|---|---|---|---|
| Typical Recorded Error (div/%) | 0 | −0.4 | −0.3 | −0.2 | −0.1 | +0.3 | +0.7 | +1.2 | +1.4 |

Determining Maximum One-Division Error

Divisions of Measurement

1

2

4

8

0.5%

$\frac{0.9 \text{ div}}{2} = 0.45\%$

$\frac{1.5 \text{ div}}{4} = 0.375\%$

$\frac{1.4 \text{ div}}{8} = 0.175\%$

NOTE

**Percentage figures apply only when delayed sweep rate is 1/100 of the main sweep rate.**

**Fig. 4-2. Typical Delay Time Error Figures.**

h. CHECK—Scan the figures recorded in step d for difference readings over the center eight divisions (see Fig. 4-2). Find the maximum error over an eight-division measurement, divide by eight, and check that it is within the allowable error given in Fig. 4-3.

i. Set the time-mark generator for 10 μs markers.

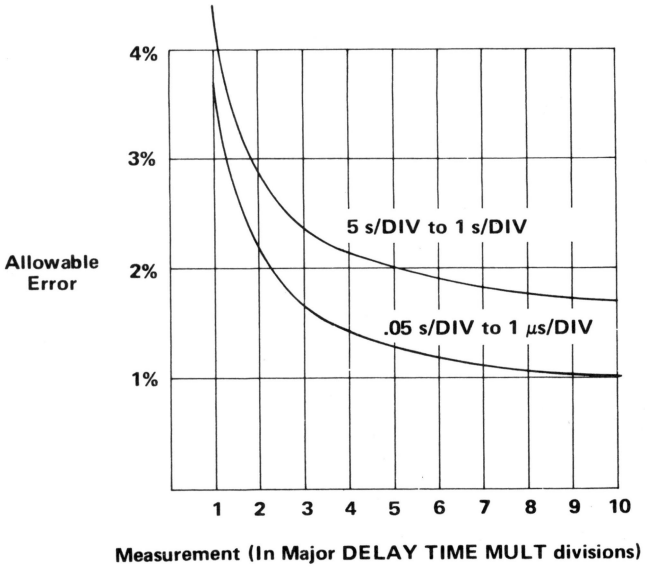


**Fig. 4-3. Allowable Delay Time Error.**

j. Change the following control settings:

| | |
|---|---|
| TIME/DIV OR DLY TIME | 10 μs |
| DLY'D Time/ Division | .1 μs (press in for DLY'D SWP Display Mode) |
| MAIN TRIGGERING LEVEL | Set for stable display |

k. Repeat steps c through h.

## 13. Check Delay-Time Jitter

a. Set the time-mark generator for 1 ms markers.

b. Change the following control settings:

| | |
|---|---|
| DELAY TIME MULT | 1.00 |
| TIME/DIV OR DLY TIME | 1 ms |
| DLY'D Time/ Division | 0.5 μs (press in for DLY'D SWP Display Mode) |
| VARIABLE | CAL |

c. Position the pulse near the center of the CRT display area with the DELAY TIME MULT dial.

d. CHECK—Jitter in the leading edge of the pulse should not exceed one graticule division (one part in 20,000). Disregard any slow drift.

e. Turn the DELAY TIME MULT dial to about 9.00 and adjust so the pulse is displayed near the center of the CRT display area.

f. CHECK—Jitter on the leading edge of the pulse should not exceed one graticule division.

## 14. Check Mixed Sweep Operation

a. Change the following control settings:

| | |
|---|---|
| TIME/DIV OR DLY TIME | 1 ms |
| DLY'D Time/ Division | 1 ms (press in for MAIN SWP Display Mode) |
| DELAY TIME MULT | 10.00 |
| MAIN TRIGGERING LEVEL | Set for stable display |

b. CHECK—Timing over center eight graticule divisions. Note the error for part d.

c. Change the following settings:

| | |
|---|---|
| TIME/DIV OR DLY TIME | 1 ms |
| DLY'D Time/ Division | .5 ms (press in for DLY'D SWP Display Mode) |
| VARIABLE | Pull out for MIXED Display Mode |

d. CHECK—Timing over center eight graticule divisions is within 0.16 division (2%) plus the main sweep error noted in part b.

e. Set the DELAY TIME MULT dial to 0.00.

f. Set the time-mark generator for 0.5 ms markers.

g. CHECK—Timing over center eight divisions is within 0.16 division (2%). Position as necessary.

## 15. Check Main and Delayed Sweep Variable Control Operation

a. Set the time-mark generator for 10 ms markers.

b. Change the following control settings:

| | |
|---|---|
| TIME/DIV OR DLY TIME | 1 ms |
| DLY'D Time/ Division | 1 ms (press in for MAIN SWP Display Mode) |
| MAIN TRIGGERING LEVEL | Set for stable display |

c. Position the markers to the far left and right graticule lines with the POSITION control.

d. Turn the VARIABLE control fully counterclockwise.

e. CHECK—CRT display for equal to or less than four division spacing between markers (indicates adequate range for continuously variable sweep rates between calibrated steps).

f. Change the following control settings:

| | |
|---|---|
| TIME/DIV OR DLY TIME | 5 ms |
| DLY'D Time/ Division | 1 ms (press in for DLY'D SWP Display Mode) |
| Variable Selector (Internal) | Delayed Variable |
| VARIABLE | CAL |

g. Position the markers to the far left and right graticule lines with the POSITION control.

h. Rotate the VARIABLE control fully counterclockwise.

i. CHECK—CRT display for equal to or less than four division spacing between markers (indicates adequate range for continuously variable delayed sweep rates between calibrated steps).

j. Disconnect all test equipment.

## 16. Check External Amplifier Gain

a. Change the following control settings:

**7A16A**

| | |
|---|---|
| AC-DC-GND | DC |
| Volts/Div | .2 V |

**7B53A/7B53AN**

| | |
|---|---|
| MAIN TRIGGERING | |
| MODE | AUTO |
| SOURCE | EXT |
| TIME/DIV OR | |
| DLY TIME | 10 μs |
| DLY'D Time/ | |
| Division | 10 μs (press in for MAIN SWP Display Mode) |
| MAG | X1 |

b. Connect the low-frequency sine-wave generator to the 7A16A Input with a 50-ohm BNC cable and 50-ohm BNC termination.

c. Set the generator for a four-division display (800 millivolts) at 100 kilohertz.

d. Disconnect the sine-wave generator from the 7A16A and connect it to the 7B53A/7B53AN MAIN TRIG IN OR AMPL connector.

e. Change the TIME/DIV OR DLY TIME switch to AMPL. Rotate the POSITION control to center the display on the graticule.

f. CHECK—CRT horizontal trace length must be eight divisions ±0.8 division.

g. Press the EXT ÷10 button of the MAIN TRIGGERING SOURCE switch.

h. CHECK—CRT horizontal trace length must be 0.8 divisions with ±0.08 division.

i. Set the MAG switch to X10. Rotate the POSITION control to center the display on the graticule.

j. CHECK—CRT horizontal trace length must be eight divisions ±0.8 division.

## 17. Check External Horizontal Bandwidth

a. Change the following control settings:

| | |
|---|---|
| MAIN TRIGGERING | |
| COUPLING | AC |
| SOURCE | EXT |
| MAG | X1 |

b. Set the sine-wave generator to 10 kilohertz and adjust the amplitude for a horizontal trace length of eight divisions.

c. Without changing the amplitude, increase the frequency of the sine-wave generator until the horizontal trace length decreases to 5.6 divisions.

d. CHECK—Sine-wave generator frequency must be two megahertz or greater (upper —3 dB point).

e. Change the MAIN TRIGGERING COUPLING switch to AC LF REJ. Repeat parts b, c, and d.

f. Change the MAIN TRIGGERING COUPLING switch to DC. Repeat parts b, c, and d.

g. Change the MAIN TRIGGERING COUPLING switch to AC HF REJ. Repeat parts b and c.

h. CHECK—Sine-wave generator frequency must be 100 kilohertz or greater (upper —3 dB point).

i. Disconnect all test equipment.

## OUTPUT SIGNALS CHECK

| Equipment Required | |
|---|---|
| 1. 7603 Oscilloscope | 2. 7A16A Amplifier unit |
| | 3. 42-inch 50-ohm BNC cable |

### 18. Check Delayed Sweep Gate Output

a. Set the controls as given under Preliminary Control Settings.

b. Connect a 42-inch 50-ohm BNC cable from the DLY'D TRIG IN connector (delayed-gate output when Delayed Triggering SOURCE switch is set to INT) to the 7A16A input.

c. Set the 7A16A for a deflection factor of one volt/division with DC input coupling.

d. Change the following control settings:

| | |
|---|---|
| DELAY TIME MULT | 5.00 |
| TIME/DIV OR DLY TIME | 1 ms |
| DLY'D Time/ Division | .1 ms (pull out for INTEN Display Mode) |

e. CHECK—CRT display for positive-going rectangular pulse with the baseline level from zero to one volt and peak-to-peak amplitude of 3.5 volts within 1.4 volts. Check that the top of the pulse is intensified (verifies that delayed-gate pulse is same duration as delayed sweep).

This completes the Performance Check procedure for the 7B53A/7B53AN. If the instrument has met all tolerances given in this procedure, it is correctly calibrated and within the specified tolerances. Disconnect all test equipment.

# PART II—ADJUSTMENT

## Introduction

The following procedure returns the 7B53A/7B53AN to correct calibration. All limits and tolerances given in this procedure are calibration guides, and should not be interpreted as instrument specifications except as listed in the Performance Requirement column of the Specifications in the 7B53A/7B53AN Operators Manual. The actual operation of the instrument may exceed the given limits or tolerances if the instrument meets the Performance Requirements as checked in Part I—Performance Check of this section.

## INDEX TO PART II—ADJUSTMENT

### Trigger System Adjustment

1. Adjust Trigger DC Balance and Main Trigger Level Centering (R72, R333) Page 4-21

2. Adjust Delayed Trigger Level Centering (R435) Page 4-22

3. Adjust Main and Delayed External Compensation (C401, C301, C16) Page 4-22

### Horizontal System Adjustment

4. Adjust Main and Delayed Sweep Offset (R592, R675) Page 4-23

5. Adjust SWP CAL (front-panel) Page 4-24

6. Adjust Magnified Sweep Gain (R762) Page 4-24

7. Adjust Main and Delayed Sweep Length (R564, R652) Page 4-24

8. Adjust Delayed Sweep Start and Delayed Sweep Stop (R576, R572) Page 4-25

9. Adjust Main and Delayed Sweep High-Frequency Timing (C594, C691) Page 4-26

## Preliminary Procedure for Adjustment

1. Install the Vertical Amplifier unit directly into the left vertical compartment of the oscilloscope.

2. Install the 067-0589-00 plug-in extender into the horizontal compartment.

3. Remove the side covers from the 7B53A/7B53AN and connect the instrument to the plug-in extender.

4. Turn on the oscilloscope and allow at least 20 minutes warmup before proceeding with adjustments.

5. Set the equipment controls as given in this section under Preliminary Control Settings.

6. Refer to Fig. 6-17, adjustment locations, for appropriate test point (TP) locations.

# TRIGGER SYSTEM ADJUSTMENT

## Equipment Required

1. 7603 Oscilloscope
2. 7A16A Amplifier
3. 10X Probe
4. Medium-frequency signal generator
5. Square-wave generator
6. Plug-in Extender
7. 42-inch 50-ohm BNC Cable
8. 18-inch 50-ohm BNC Cable
9. 50-ohm BNC Termination
10. GR to BNC Female Adapter
11. 50-ohm X10 Attenuator
12. Input RC Normalizer; RC 1 megohm X 20 picofarads
13. VOM

## Control Settings

Set the controls as given under Preliminary Control Settings.

*NOTE*

*See Fig. 6-17 (located on pull-out page in rear of diagrams section) for location of trigger system adjustments and test points.*

## 1. Adjust Trigger DC Balance and Main Trigger Level Centering (R72, R333)

a. To establish electrical center, set the 7A16A input coupling switch to GND. Connect a VOM across TP50 and TP59 on the 7B53A/7B53AN. Rotate the 7A16A position control for a 0 V reading on the VOM.

*NOTE*

*Do not move the 7A16A position control until part 1 of this step has been completed.*

b. Set the 7A16A input coupling to DC and the 7B53A/7B53AN MAIN TRIGGERING COUPLING switch to DC.

c. Connect the medium-frequency signal generator to the 7A16A Input with a GR-to-BNC female adapter, 50-ohm BNC cable, and 50-ohm BNC termination.

d. Set the medium-frequency signal generator for a one-division display at 50 kilohertz.

e. Set the MAIN TRIGGERING LEVEL control to (0).

f. CHECK—CRT for sweep trigger point (start of sweep) at the electrical center.

g. ADJUST—R72, Trigger DC Balance, for sweep trigger point at CRT electrical center.

h. Change the MAIN TRIGGERING SLOPE switch to – and +. Note the positions of the sweep trigger point with respect to CRT electrical center.

i. Change the MAIN TRIGGERING COUPLING switch to AC.

j. CHECK—Sweep trigger points occur at CRT electrical center or at points equally above and below CRT electrical center of the – and + SLOPE.

k. ADJUST—R333, Main Trigger Level Center, for sweep trigger points equally above and below CRT electrical center for the – and + SLOPE.

l. INTERACTION—Repeat the adjustment of R72, Trigger DC Balance, and R333, Main Trigger Level Center, as necessary.

## 2. Adjust Delayed Trigger Level Centering (R435)

a. Change the following control settings:

| | |
|---|---|
| TIME/DIV OR DLY TIME | 20 μs |
| DLY'D Time/ Division | 10 μs (press in for DLY'D SWP Display Mode) |
| DLY'D TRIG LEVEL | RUNS AFTER DLY TIME |

b. Rotate the DLY'D TRIG LEVEL control for a stable display with the sweep trigger point at CRT electrical center.

c. Change the DLY'D TRIG SLOPE switch to — and +. Note the positions of the sweep trigger point with respect to CRT electrical center.

d. ADJUST—R435 for sweep trigger points to occur at CRT electrical center or at points equally above and below CRT electrical center for the — and + DLY'D TRIG SLOPE.

e. Disconnect all test equipment.

## 3. Adjust Main and Delayed External Compensation (C401, C301, C16)

a. Connect the output of the square-wave generator to the 7A16A Input with a GR-to-BNC female adapter, 50-ohm BNC cable, 10X attenuator, 50-ohm termination, and 20 picofarad X 1 megohm Input RC Normalizer.

b. Change the following control settings:

**7A16A**

| | |
|---|---|
| Volts/Div | .1 V |

**7B53A/7B53AN**

| | |
|---|---|
| MAIN TRIGGERING | |
| LEVEL | Set for stable display |
| COUPLING | DC |
| MAG | X1 |
| TIME/DIV OR DLY TIME | 1 ms |
| DLY'D Time/ Division | .5 ms (pull out for INTEN Display Mode) |
| DLY'D TRIG | |
| COUPLING | DC |
| SOURCE | EXT |

c. Set the square-wave generator for a five-division display at one kilohertz.

d. Disconnect the RC Normalizer from the 7A16A Input and connect it to the DLY'D TRIG IN connector.

e. Connect the 10X probe (properly compensated) from the 7A16A Input to TP415.

f. Change the following control settings:

**7A16A**

| | |
|---|---|
| Volts/Div | 5 mV |

**7B53A/7B53AN**

| | |
|---|---|
| MAIN TRIGGERING | |
| LEVEL | Set for TRIG'D light on |
| DLY'D Time/ Division | Press in for DLY'D SWP Display Mode |
| DLY'D TRIG | |
| LEVEL | Set for a stable delayed sweep display |

g. ADJUST—Dly'd Ext Comp adjustment C401 for best square corner on leading edge of displayed waveform.

h. Disconnect the 10X probe from TP415 and connect it to TP315. Disconnect the RC Normalizer from the DLY'D TRIG IN connector and connect it to the MAIN TRIG IN connector.

i. Change the following control settings:

| | |
|---|---|
| TIME/DIV OR DLY TIME | 1 ms |
| DLY'D Time/ Division | 1 ms (press in for MAIN SWP Display Mode) |
| MAIN TRIGGERING | |
| SOURCE | EXT |
| LEVEL | Adjust for stable main sweep display |

j. ADJUST—Main Ext Comp adjustment C301 for best square corner on leading edge of waveform.

k. Remove the 10X attenuator and connect the 50-ohm termination directly to the Normalizer. Change the MAIN TRIGGERING SOURCE switch to EXT ÷10.

l. ADJUST—EXT ÷10 Input Compensation C16 for best square corner on leading edge of waveform.

m. Disconnect all test equipment.

## HORIZONTAL SYSTEM ADJUSTMENT

### Equipment Required

1. 7603 Oscilloscope
2. 7A16A Amplifier
3. Time-mark generator
4. 42-inch 50-ohm BNC cable
5. 50-ohm BNC termination
6. 10X probe
7. Plug-in extender
8. VOM

### Control Settings

Set the controls as given under Preliminary Control Settings.

*NOTE*

*See Fig. 6-17 (located on pull-out page in rear of diagrams section) for location of horizontal system adjustments and test points.*

### 4. Adjust Main and Delayed Sweep Offset (R592, R675)

a. Change the following control settings:

**7A16A**

| | |
|---|---|
| Volts/Div | 5 mV |

**7B53A/7B53AN**

| | |
|---|---|
| TIME/DIV OR DLY TIME | 1 ms |
| DLY'D Time/ Division | 1 ms (press in for MAIN SWP Display Mode) |
| Mode | Normal |

b. Connect a VOM between TP580 and ground.

c. ADJUST—R592, Main Sweep Offset, for 0 volts.

d. Change the following control settings:

| | |
|---|---|
| TIME/DIV OR DLY TIME | 2 ms |
| DLY'D Time/ Division | 1 ms (press in for DLY'D SWP Display Mode) |

e. Move the test lead from TP580 to TP690.

f. ADJUST—R675, Delayed Sweep Offset, for 0 volts.

g. INTERACTION—Check step 7.

h. Disconnect all test equipment.

## 5. Adjust SWP CAL (front-panel)

a. Connect the marker output of the time-mark generator to the 7A16A Input with the 50-ohm BNC cable and 50-ohm BNC termination.

b. Set the time-mark generator for one-millisecond markers.

c. Change the following control settings:

**7A16A**

| | |
|---|---|
| Volts/Div | .5 V |

**7B53A/7B53AN**

| | |
|---|---|
| MAIN TRIGGERING LEVEL | Set for stable main sweep display |
| TIME/DIV OR DLY TIME | 1 ms |
| DLY'D Time/ Division | 1 ms (press in for MAIN SWP Display Mode) |
| Mode | Auto |

d. CHECK—CRT display for one marker each division between the second and tenth graticule lines (position the display as necessary).

e. ADJUST—Front-panel SWP CAL control (R290) for one marker per division. The second and tenth markers must coincide exactly with their respective graticule lines (Reposition the display slightly with the horizontal POSITION control, if necessary).

## 6. Adjust Magnified Sweep Gain (R762)

a. Set the time-mark generator for 0.1 millisecond markers.

b. Press and release the MAG switch to X10 (increase the oscilloscope intensity as necessary).

c. CHECK—CRT display for one marker per division between the second and tenth graticule lines.

d. ADJUST—Mag Gain control R762 for one marker per division. The second and tenth markers must coincide exactly with their repsective graticule lines (position the display as necessary with the horizontal POSITION control).

## 7. Adjust Main and Delayed Sweep Length (R564, R652)

a. Set the time-mark generator for 0.1 and one millisecond markers. Press MAG switch to X1.

b. Rotate the MAIN TRIGGERING LEVEL control for a triggered display. Rotate the POSITION control to position the eleventh one-millisecond marker at the center vertical graticule line (see Fig. 4-4).

c. CHECK—CRT display for sweep length of 10.4 divisions within 0.3 division, as shown by 0.1 to 0.7 division of display to the right of the center vertical graticule line (see Fig. 4-4).

d. ADJUST—Main Swp Length, R564 for four 0.1 millisecond markers to the right of the center vertical graticule line.

e. Change the following control settings:

| | |
|---|---|
| TIME/DIV OR DLY TIME | 1 ms |
| DLY'D Time/ Division | .1 ms (press in for DLY'D SWP Display Mode) |
| MAIN TRIGGERING LEVEL | Set for TRIG'D light on |
| DLY'D TRIG LEVEL | DLY'D SWP TRIGGERABLE |

f. Set the time-mark generator for 0.1 millisecond and 10 microsecond markers.

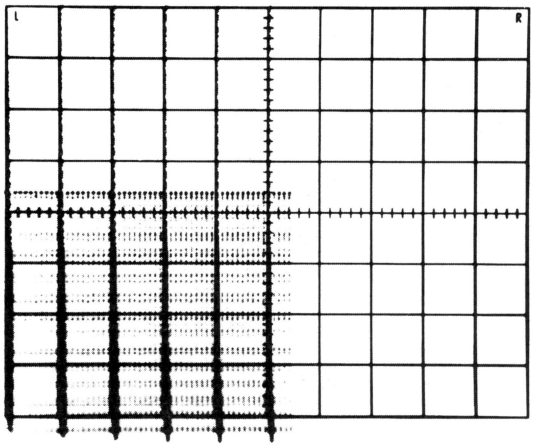

**Fig. 4-4. Typical CRT display when checking sweep length.**

g. Rotate the DLY'D TRIG LEVEL control for a stable display. Rotate the horizontal POSITION control to position the eleventh 0.1 millisecond marker to the center vertical graticule line.

h. CHECK–CRT display for sweep length of 10.4 divisions within 0.3 division, as shown by 0.1 to 0.7 division of display to the right of the center vertical graticule line.

i. ADJUST–R652, Dly'd Swp Length, for four 10 microsecond markers to the right of the center vertical graticule line.

j. INTERACTION–Check step 4.

## 8. Adjust Delayed Sweep Start and Delayed Sweep Stop (R576, R572)

a. Set the time-mark generator for one-millisecond markers.

b. Change the following control settings:

**7B53A/7B53AN**

| | |
|---|---|
| TIME/DIV OR DLY TIME | 1 ms |
| DLY'D Time/ Division | 1 ms (pull out for INTEN Display Mode) |
| MAIN TRIGGERING LEVEL | Set for stable display |
| DLY'D TRIG LEVEL | RUNS AFTER DLY TIME |

*NOTE*

*Coarse adjustments of the Delayed Start and Delayed Stop controls will be made in the INTEN DISPLAY MODE followed by fine adjustments in the DLY'D SWP DISPLAY MODE.*

c. CHECK–With the DELAY TIME MULT dial set to 1.00, check that the intensified sweep starts on the second marker (position as necessary).

d. ADJUST–Dly'd Start, R576, to start the intensified sweep on the second marker.

e. CHECK–Rotate the DELAY TIME MULT dial to 9.00 and check that the intensified sweep starts on the tenth marker.

f. ADJUST–Dly'd Stop control R572 to start the intensified sweep on the tenth marker.

g. Change the following control settings:

| | |
|---|---|
| TIME/DIV OR DLY TIME | 1 ms |
| DLY'D Time/ Division | 10 μs (press in for DLY'D SWP Display Mode) |
| DELAY TIME MULT | 1.00 |

h. ADJUST–Observe the time-marker and adjust R576 to start the delayed sweep at the bottom of marker (see Fig. 4-5). Use the POSITION control to position the display to the center vertical graticule line. If the marker is not displayed, repeat parts b through d, g, and h.

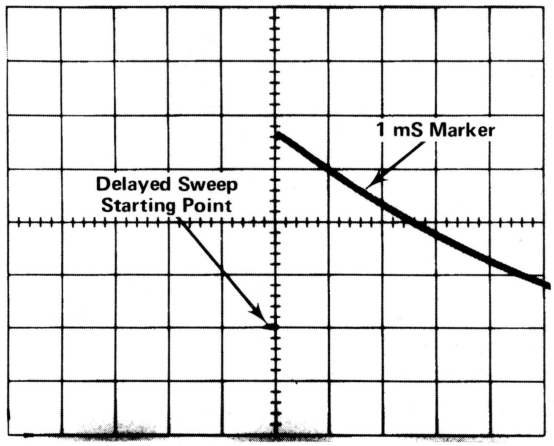


**(A) Correct delayed sweep starting point.**

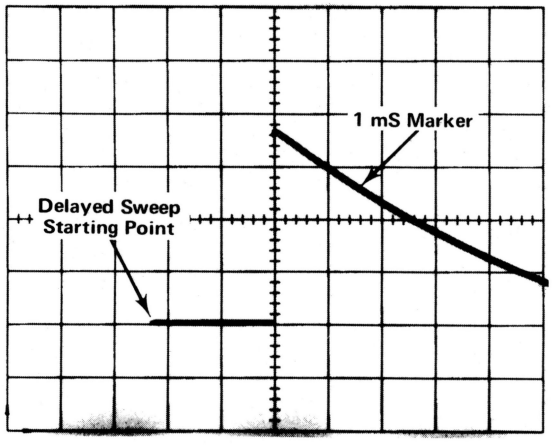


**(B) Incorrect delayed sweep starting point.**

**Fig. 4-5. Typical CRT display for adjustment of Dly'd Sweep Start and Dly'd Sweep Stop.**

i. Rotate the DTM to 9.00. Observe the time-marker and adjust R572 to start the delayed sweep at the bottom of marker (see Fig. 4-5). Use the POSITION control to position the display to the center vertical graticule line. If the marker is not displayed, repeat parts b, e, f, g, and i.

j. INTERACTION–Repeat the adjustment of R572 and R576 as necessary.

## 9. Adjust Main and Delayed Sweep High-Frequency Timing

a. Set the time-mark generator for .1 microsecond markers.

b. Change the following control settings:

| | |
|---|---|
| TIME/DIV OR DLY TIME | .1 μs |
| DLY'D Time/ Division | .1 μs |
| MAIN TRIGGERING LEVEL | Set for stable main sweep display |

c. Rotate the POSITION control to align the second .1 microsecond marker with the second vertical graticule line and the tenth .1 microsecond marker with the tenth vertical graticule line.

d. CHECK–CRT display for .1 microsecond marker per division within 0.16 division (2%).

e. ADJUST–Main Swp HF Timing control C594 for one marker each division.

f. Change the following control settings:

| | |
|---|---|
| TIME/DIV OR DLY TIME | .2 μs |
| DLY'D Time/ Division | .1 μs (press in for DLY'D SWP Display Mode) |
| DLY'D TRIG LEVEL | RUNS AFTER DLY TIME |

g. Rotate the POSITION control to align the second .1 microsecond marker with the second vertical graticule line and the tenth marker with the tenth vertical graticule line.

h. CHECK–CRT display for .1 microsecond marker each division within 0.24 division (3%).

i. ADJUST–Dly'd Swp HF Timing control C691 for one marker each division. Use the POSITION control as necessary to align the display.

j. Change the following control settings:

| | |
|---|---|
| TIME/DIV OR DLY TIME | 1 μs |
| DLY'D Time/ Division | .05 μs (press in for DLY'D SWP Display Mode) |
| MAIN TRIGGERING LEVEL | Set for a stable display |

k. Set the time-mark generator for 1 microsecond markers.

l. Rotate the DELAY TIME MULT dial to 1.00. Rotate the dial as necessary to start the delayed sweep in the second time-marker. Note the exact DELAY TIME MULT dial setting.

m. Rotate the DELAY TIME MULT dial exactly 8.00 from the dial setting noted in part k.

n. CHECK–Delayed sweep to start on the tenth time marker.

o. ADJUST–C594, Main HF Timing, to start the delayed sweep on the tenth time-marker.

p. Disconnect all test equipment.

# REPLACEABLE ELECTRICAL PARTS

## PARTS ORDERING INFORMATION

Replacement parts are available from or through your local Tektronix, Inc. Field Office or representative.

Changes to Tektronix instruments are sometimes made to accommodate improved components as they become available, and to give you the benefit of the latest circuit improvements developed in our engineering department. It is therefore important, when ordering parts, to include the following information in your order: Part number, instrument type or number, serial number, and modification number if applicable.

If a part you have ordered has been replaced with a new or improved part, your local Tektronix, Inc. Field Office or representative will contact you concerning any change in part number.

Change information, if any, is located at the rear of this manual.

## SPECIAL NOTES AND SYMBOLS

| | |
|---|---|
| X000 | Part first added at this serial number |
| 00X | Part removed after this serial number |

### ITEM NAME

In the Parts List, an Item Name is separated from the description by a colon (:). Because of space limitations, an Item Name may sometimes appear as incomplete. For further Item Name identification, the U.S. Federal Cataloging Handbook H6-1 can be utilized where possible.

## ABBREVIATIONS

| | | | |
|---|---|---|---|
| ACTR | ACTUATOR | PLSTC | PLASTIC |
| ASSY | ASSEMBLY | QTZ | QUARTZ |
| CAP | CAPACITOR | RECP | RECEPTACLE |
| CER | CERAMIC | RES | RESISTOR |
| CKT | CIRCUIT | RF | RADIO FREQUENCY |
| COMP | COMPOSITION | SEL | SELECTED |
| CONN | CONNECTOR | SEMICOND | SEMICONDUCTOR |
| ELCTLT | ELECTROLYTIC | SENS | SENSITIVE |
| ELEC | ELECTRICAL | VAR | VARIABLE |
| INCAND | INCANDESCENT | WW | WIREWOUND |
| LED | LIGHT EMITTING DIODE | XFMR | TRANSFORMER |
| NONWIR | NON WIREWOUND | XTAL | CRYSTAL |

# CROSS INDEX MFR. CODE NUMBER TO MANUFACTURER

| MFR.CODE | MANUFACTURER | ADDRESS | CITY,STATE,ZIP |
|---|---|---|---|
| 00853 | SANGAMO ELECTRIC CO., S. CAROLINA DIV. | P. O. BOX 128 | PICKENS, SC 29671 |
| 01121 | ALLEN-BRADLEY CO. | 1201 2ND ST. SOUTH | MILWAUKEE, WI 53204 |
| 01963 | CHERRY ELECTRICAL PRODUCTS CORP. | 3600 SUNSET AVE. | WAUKEGAN, IL 60085 |
| 02111 | SPECTROL ELECTRONICS CORP. | 17070 EAST GALE AVE. | CITY OF INDUSTRY, CA 91745 |
| 03888 | KDI PYROFILM CORP. | 60 S. JEFFERSON RD. | WHIPPANY, NJ 07981 |
| 04713 | MOTOROLA, INC., SEMICONDUCTOR PRODUCTS DIV. | 5005 E. MCDOWELL RD. | PHOENIX, AZ 85036 |
| 07263 | FAIRCHILD SEMICONDUCTOR, A DIV. OF FAIRCHILD CAMERA AND INSTRUMENT CORP. | 464 ELLIS ST. | MOUNTAIN VIEW, CA 94042 |
| 07910 | TELEDYNE SEMICONDUCTOR | 12515 CHADRON AVE. | HAWTHORNE, CA 90250 |
| 08806 | GENERAL ELECTRIC CO., MINIATURE LAMP PRODUCTS DEPT. | NELA PK. | CLEVELAND, OH 44112 |
| 10389 | CHICAGO SWITCH, INC. | 2035 WABANSIA AVE. | CHICAGO, IL 60647 |
| 12637 | FLEET PRODUCTS CO., INC. | 1920 E POMONA ST. | SANTA ANA, CA 92705 |
| 12697 | CLAROSTAT MFG. CO., INC. | LOWER WASHINGTON ST. | DOVER, NH 03820 |
| 12954 | DICKSON ELECTRONICS CORP. | 8700 E. THOMAS RD. | SCOTTSDALE, AZ 85252 |
| 14936 | GENERAL INSTRUMENT CORP., SEMICONDUCTOR PRODUCTS GROUP | 600 W. JOHN ST. | HICKSVILLE, NY 11802 |
| 15818 | TELEDYNE SEMICONDUCTOR | 1300 TERRA BELLA AVE. | MOUNTAIN VIEW, CA 94040 |
| 24931 | SPECIALTY CONNECTOR CO., INC. | 3560 MADISON AVE. | INDIANAPOLIS, IN 46227 |
| 34553 | AMPEREX ELECTRONIC CORP., COMPONENT DIV. | 35 HOFFMAN AVE. | HAPPAUGE, NY 11787 |
| 56289 | SPRAGUE ELECTRIC CO. | | NORTH ADAMS, MA 01247 |
| 71590 | CENTRALAB ELECTRONICS, DIV. OF GLOBE-UNION, INC. | 5757 N. GREEN BAY AVE. | MILWAUKEE, WI 53201 |
| 72982 | ERIE TECHNOLOGICAL PRODUCTS, INC. | 644 W. 12TH ST. | ERIE, PA 16512 |
| 74970 | JOHNSON, E. F., CO. | 299 10TH AVE. S. W. | WASECA, MN 56093 |
| 75042 | TRW ELECTRONIC COMPONENTS, IRC FIXED RESISTORS, PHILADELPHIA DIVISION | 401 N. BROAD ST. | PHILADELPHIA, PA 19108 |
| 78488 | STACKPOLE CARBON CO. | | ST. MARYS, PA 15857 |
| 80009 | TEKTRONIX, INC. | P. O. BOX 500 | BEAVERTON, OR 97077 |
| 80294 | BOURNS, INC., INSTRUMENT DIV. | 6135 MAGNOLIA AVE. | RIVERSIDE, CA 92506 |
| 81483 | INTERNATIONAL RECTIFIER CORP. | 9220 SUNSET BLVD. | LOS ANGELES, CA 90069 |
| 86684 | RCA CORP., ELECTRONIC COMPONENTS | 415 S. 5TH ST. | HARRISON, NJ 07029 |
| 90201 | MALLORY CAPACITOR CO., DIV. OF P. R. MALLORY CO., INC. | 3029 E. WASHINGTON ST. | INDIANAPOLIS, IN 46206 |
| 91637 | DALE ELECTRONICS, INC. | P. O. BOX 609 | COLUMBUS, NB 68601 |

| Ckt No. | Tektronix Part No. | Serial/Model No. Eff | Dscont | Name & Description | Mfr Code | Mfr Part Number |
|---|---|---|---|---|---|---|
| A1 | 670-2257-00 | B010100 | B089999 | CKT BOARD ASSY:INTERFACE(7B53A ONLY) | 80009 | 670-2257-00 |
| A1 | 670-2257-02 | B090000 | | CKT BOARD ASSY:INTERFACE(7B53A ONLY) | 80009 | 670-2257-02 |
| A1 | 670-1863-00 | B010100 | B019999 | CKT BOARD ASSY:INTERFACE(7B53AN ONLY) | 80009 | 670-1863-00 |
| A1 | 670-1863-01 | B020000 | B089999 | CKT BOARD ASSY:INTERFACE(7B53AN ONLY) | 80009 | 670-1863-01 |
| A1 | 670-1863-02 | B090000 | | CKT BOARD ASSY:INTERFACE(7B53AN ONLY) | 80009 | 670-1863-02 |
| A2 | 670-1869-00 | | | CKT BOARD ASSY:SOURCE SWITCH | 80009 | 670-1869-00 |
| A3 | 670-1868-00 | | | CKT BOARD ASSY:COUPLING SWITCH | 80009 | 670-1868-00 |
| A4 | 670-1865-01 | B010100 | B069999 | CKT BOARD ASSY:TRIGGER(7B53A ONLY) | 80009 | 670-1865-01 |
| A4 | 670-1865-02 | B070000 | | CKT BOARD ASSY:TRIGGER(7B53A ONLY) | 80009 | 670-1865-02 |
| A4 | 670-1865-00 | B010100 | B019999 | CKT BOARD ASSY:TRIGGER(7B53AN ONLY) | 80009 | 670-1865-00 |
| A4 | 670-1865-01 | B020000 | B069999 | CKT BOARD ASSY:TRIGGER(7B53AN ONLY) | 80009 | 670-1865-01 |
| A4 | 670-1865-02 | B070000 | | CKT BOARD ASSY:TRIGGER(7B53AN ONLY) | 80009 | 670-1865-02 |
| A5 | 670-1867-00 | | | CKT BOARD ASSY:MODE SWITCH | 80009 | 670-1867-00 |
| A6 | 670-1864-00 | B010100 | B089999 | CKT BOARD ASSY:SWEEP | 80009 | 670-1864-00 |
| A6 | 670-1864-01 | B090000 | | CKT BOARD ASSY:SWEEP | 80009 | 670-1864-01 |
| A7 | 670-1866-00 | | | CKT BOARD ASSY:DLY'D TRIGGER SWITCH | 80009 | 670-1866-00 |
| A8 | 670-2258-01 | | | CKT BOARD ASSY:READOUT(7B53A ONLY) | 80009 | 670-2258-01 |
| A9 | 670-2216-00 | | | CKT BOARD ASSY:SHIELD | 80009 | 670-2216-00 |
| C2 | 283-0636-00 | | | CAP.,FXD,MICA D:36PF,1.4%,100V | 00853 | D151E360G0 |
| C16 | 281-0092-00 | | | CAP.,VAR,CER DI:9-35PF | 72982 | 538-011E2P094R |
| C17 | 281-0526-00 | | | CAP.,FXD,CER DI:1.5PF,+/-0.5PF,500V | 72982 | 301-000S2K0159D |
| C23 | 281-0549-00 | | | CAP.,FXD,CER DI:68PF,10%,500V | 72982 | 301-000U2J0680K |
| C25 | 281-0601-00 | | | CAP.,FXD,CER DI:7.5PF,500V | 72982 | 301-000C0H0759D |
| C26 | 281-0628-00 | | | CAP.,FXD,CER DI:15PF,5%,600V | 72982 | 301-000C0G0150G |
| C28 | 283-0068-00 | | | CAP.,FXD,CER DI:0.01UF,+100-0%,500V | 56289 | 19C241 |
| C41 | 283-0068-00 | | | CAP.,FXD,CER DI:0.01UF,+100-0%,500V | 56289 | 19C241 |
| C43 | 283-0599-00 | | | CAP.,FXD,MICA D:98PF,5%,500V | 00853 | D105E980J0 |
| C51[1] | 281-0547-00 | | | CAP.,FXD,CER DI:2.7PF,10%,500V | 72982 | 301-000C0J0279C |
| C51[2] | 281-0547-00 | XB020000 | | CAP.,FXD,CER DI:2.7PF,10%,500V | 72982 | 301-000C0J0279C |
| C52 | 283-0080-00 | | | CAP.,FXD,CER DI:0.022UF,+80-20%,25V | 56289 | 19C611 |
| C55 | 281-0523-00 | | | CAP.,FXD,CER DI:100PF,+/-20PF,350V | 72982 | 301-000U2M0101M |
| C60[1] | 281-0547-00 | | | CAP.,FXD,CER DI:2.7PF,10%,500V | 72982 | 301-000C0J0279C |
| C60[2] | 281-0547-00 | XB020000 | | CAP.,FXD,CER DI:2.7PF,10%,500V | 72982 | 301-000C0J0279C |
| C63 | 283-0000-00 | | | CAP.,FXD,CER DI:0.001UF,+100-0%,500V | 72982 | 831-516E102P |
| C64 | 281-0518-00 | | | CAP.,FXD,CER DI:47PF,+/-9.4PF,500V | 72982 | 301-000U2J0470M |
| C66 | 283-0080-00 | | | CAP.,FXD,CER DI:0.022UF,+80-20%,25V | 56289 | 19C611 |
| C68 | 283-0080-00 | | | CAP.,FXD,CER DI:0.022UF,+80-20%,25V | 56289 | 19C611 |
| C70 | 283-0080-00 | | | CAP.,FXD,CER DI:0.022UF,+80-20%,25V | 56289 | 19C611 |
| C74 | 283-0080-00 | | | CAP.,FXD,CER DI:0.022UF,+80-20%,25V | 56289 | 19C611 |
| C82 | 283-0080-00 | | | CAP.,FXD,CER DI:0.022UF,+80-20%,25V | 56289 | 19C611 |
| C101 | 290-0523-00 | | | CAP.,FXD,ELCTLT:2.2UF,20%,20V | 56289 | 196D225X0025HA1 |
| C103 | 283-0010-00 | B010100 | B049999 | CAP.,FXD,CER DI:0.05UF,+100-20%,50V | 56289 | 273C20 |
| C103 | 283-0341-00 | B050000 | | CAP.,FXD,CER DI:0.047UF,10%,100V | 72982 | 8131N145W5R473K |
| C134 | 295-0156-00 | B010100 | B169699 | CAP.,SET,MATCHED:0.01UF | 80009 | 295-0156-00 |
| C134[3] | | B169700 | | :0.1005UF | | |
| C136 | | | | :1UF | | |
| C138 | 295-0156-00 | | | CAP.,SET,MATCHED:0.01UF | 80009 | 295-0156-00 |
| C141 | 290-0522-00 | B010100 | B019999 | CAP.,FXD,ELCTLT:1UF,20%,50V | 56289 | 196D105X0050HA1 |
| C141 | 283-0111-00 | B110000 | | CAP.,FXD,CER DI:0.1UF,20%,50V | 72982 | 8131N075651104M |
| C150 | 295-0156-00 | | | CAP.,SET,MATCHED:1UF | 80009 | 295-0156-00 |
| C152[3] | | B010100 | B169699 | :0.01UF | | |
| C152 | | B169700 | | :0.1005UF | | |
| C230 | 283-0000-00 | | | CAP.,FXD,CER DI:0.001UF,+100-0%,500V | 72982 | 831-516E102P |
| C232 | 283-0178-00 | | | CAP.,FXD,CER DI:0.1UF,+80-20%,100V | 72982 | 8131N145651104Z |
| C234 | 283-0000-00 | | | CAP.,FXD,CER DI:0.001UF,+100-0%,500V | 72982 | 831-516E102P |

[1]7B53A only.
[2]7B53AN only.
[3]Individual timing capacitors in this assembly must be ordered by the 9-digit part number, letter suffix and tolerance printed on the timing capacitor to be replaced. The letter suffix and tolerance should be the same for all the timing capacitors in the assembly. EXAMPLE: 285-XXXX-XX F- The letter suffix and the tolerance should be the same for all of the timing capcitors in the assembly. C134, C136, C138, C150, and C152 furnished as a unit.

| Ckt No. | Tektronix Part No. | Serial/Model No. Eff | Dscont | Name & Description | Mfr Code | Mfr Part Number |
|---|---|---|---|---|---|---|
| C236 | 283-0178-00 | | | CAP.,FXD,CER DI:0.1UF,+80-20%,100V | 72982 | 8131N145651104Z |
| C238 | 283-0000-00 | | | CAP.,FXD,CER DI:0.001UF,+100-0%,500V | 72982 | 831-516E102P |
| C240 | 283-0178-00 | | | CAP.,FXD,CER DI:0.1UF,+80-20%,100V | 72982 | 8131N145651104Z |
| C242 | 283-0000-00 | | | CAP.,FXD,CER DI:0.001UF,+100-0%,500V | 72982 | 831-516E102P |
| C244 | 283-0178-00 | | | CAP.,FXD,CER DI:0.1UF,+80-20%,100V | 72982 | 8131N145651104Z |
| C301 | 281-0178-00 | | | CAP.,VAR,PLSTC:1-4PF,500V | 34553 | 2222-809-05001 |
| C310 | 283-0000-00 | | | CAP.,FXD,CER DI:0.001UF,+100-0%,500V | 72982 | 831-516E102P |
| C313 | 281-0542-00 | B010100 | B129999 | CAP.,FXD,CER DI:18PF,10%,500V | 72982 | 301-002C0G0180K |
| C313 | 281-0605-00 | B130000 | | CAP.,FXD,CER DI:200PF,10%,500V | 72982 | 301-000Y5D0201K |
| C317 | 283-0079-00 | | | CAP.,FXD,CER DI:0.01UF,20%,250V | 72982 | 8151B202C103M |
| C319 | 290-0517-00 | | | CAP.,FXD,ELCTLT:6.8UF,20%,35V | 56289 | 196D685X0035KA1 |
| C324 | 283-0633-00 | | | CAP.,FXD,MICA D:77PF,1%,100V | 00853 | D151E770F0 |
| C330 | 283-0212-00 | | | CAP.,FXD,CER DI:2UF,20%,50V | 72982 | 8141050651205M |
| C340[1] | 281-0513-00 | B010100 | B147117 | CAP.,FXD,CER DI:27PF,+/-5.4PF,500V | 72982 | 301-000P2G0270M |
| C340[1] | 281-0605-00 | B147118 | | CAP.,FXD,CER DI:200PF,10%,500V | 72982 | 301-000Y5D0201K |
| C340[2] | 281-0513-00 | B010100 | B144429 | CAP.,FXD,CER DI:27PF,+/-5.4PF,500V | 72982 | 301-000P2G0270M |
| C340[2] | 281-0605-00 | B144430 | | CAP.,FXD,CER DI:200PF,10%,500V | 72982 | 301-000Y5D0201K |
| C344[1] | 281-0513-00 | B010100 | B147117 | CAP.,FXD,CER DI:27PF,+/-5.4PF,500V | 72982 | 301-000P2G0270M |
| C344[1] | 281-0605-00 | B147118 | | CAP.,FXD,CER DI:200PF,10%,500V | 72982 | 301-000Y5D0201K |
| C344[2] | 281-0513-00 | B010100 | B144429 | CAP.,FXD,CER DI:27PF,+/-5.4PF,500V | 72982 | 301-000P2G0270M |
| C344[2] | 281-0605-00 | B144430 | | CAP.,FXD,CER DI:200PF,10%,500V | 72982 | 301-000Y5D0201K |
| C347 | 283-0000-00 | | | CAP.,FXD,CER DI:0.001UF,+100-0%,500V | 72982 | 831-516E102P |
| C359[2] | 283-0114-00 | B010100 | B019999X | CAP.,FXD,CER DI:0.0015UF,5%,200V | 72982 | 805-509B152J |
| C363 | 283-0047-00 | | | CAP.,FXD,CER DI:270PF,5%,500V | 72982 | 861-518B271J |
| C377 | 281-0504-00 | | | CAP.,FXD,CER DI:10PF,+/-1PF,500V | 72982 | 301-000C0G0100F |
| C396 | 290-0522-00 | | | CAP.,FXD,ELCTLT:1UF,20%,50V | 56289 | 196D105X0050HA1 |
| C401 | 281-0091-00 | | | CAP.,VR,CER DI:2-8PF | 72982 | 538-011-89A |
| C411 | 283-0000-00 | | | CAP.,FXD,CER DI:0.001UF,+100-0%,500V | 72982 | 831-516E102P |
| C414 | 281-0542-00 | | | CAP.,FXD,CER DI:18PF,10%,500V | 72982 | 301-002C0G0180K |
| C417 | 283-0079-00 | | | CAP.,FXD,CER DI:0.01UF,20%,250V | 72982 | 8151B202C103M |
| C419 | 290-0517-00 | | | CAP.,FXD,ELCTLT:6.8UF,20%,35V | 56289 | 196D685X0035KA1 |
| C424 | 283-0633-00 | | | CAP.,FXD,MICA D:77PF,1%,100V | 00853 | D151E770F0 |
| C431 | 283-0212-00 | | | CAP.,FXD,CER DI:2UF,20%,50V | 72982 | 8141050651205M |
| C440 | 281-0513-00 | | | CAP.,FXD,CER DI:27PF,+/-5.4PF,500V | 72982 | 301-000P2G0270M |
| C444 | 281-0513-00 | | | CAP.,FXD,CER DI:27PF,+/-5.4PF,500V | 72982 | 301-000P2G0270M |
| C447 | 283-0000-00 | | | CAP.,FXD,CER DI:0.001UF,+100-0%,500V | 72982 | 831-516E102P |
| C459[2] | 283-0114-00 | B010100 | B019999X | CAP.,FXD,CER DI:0.0015UF,5%,200V | 72982 | 805-509B152J |
| C463 | 283-0047-00 | | | CAP.,FXD,CER DI:270PF,5%,500V | 72982 | 861-518B271J |
| C468 | 283-0000-00 | | | CAP.,FXD,CER DI:0.001UF,+100-0%,500V | 72982 | 831-516E102P |
| C477 | 281-0523-00 | | | CAP.,FXD,CER DI:100PF,+/-20PF,350V | 72982 | 301-000U2M0101M |
| C496 | 290-0522-00 | | | CAP.,FXD,ELCTLT:1UF,20%,50V | 56289 | 196D105X0050HA1 |
| C506 | 290-0527-00 | | | CAP.,FXD,ELCTLT:15UF,20%,20V | 90201 | TDC156M020NLF |
| C519 | 281-0523-00 | | | CAP.,FXD,CER DI:100PF,+/-20PF,350V | 72982 | 301-000U2M0101M |
| C520 | 290-0522-00 | | | CAP.,FXD,ELCTLT:1UF,20%,50V | 56289 | 196D105X0050HA1 |
| C527 | 281-0650-00 | XB030000 | | CAP.,FXD,CER DI:18PF,10%,200V | 72982 | 374-001C0H0180K |
| C533 | 283-0087-00 | | | CAP.,FXD,CER DI:300PF,5%,1000V | 56289 | 403637 |
| C535 | 290-0522-00 | | | CAP.,FXD,ELCTLT:1UF,20%,50V | 56289 | 196D105X0050HA1 |
| C551 | 290-0522-00 | | | CAP.,FXD,ELCTLT:1UF,20%,50V | 56289 | 196D105X0050SA1 |
| C555 | 281-0504-00 | | | CAP.,FXD,CER DI:10PF,+/-1PF,500V | 72982 | 301-000C0G0100F |
| C568 | 281-0523-00 | | | CAP.,FXD,CER DI:100PF,+/-20PF,350V | 72982 | 301-000U2M0101M |
| C572 | 290-0524-00 | | | CAP.,FXD,ELCTLT:4.7UF,20%,10V | 90201 | TDC475M010EL |
| C578 | 290-0522-00 | | | CAP.,FXD,ELCTLT:1UF,20%,50V | 56289 | 196D105X0050HA1 |
| C579 | 283-0003-00 | | | CAP.,FXD,CER DI:0.01UF,+80-20%,150V | 72982 | 855-547E103Z |

[1] 7B53A only.
[2] 7B53AN only.

| Ckt No. | Tektronix Part No. | Serial/Model No. Eff | Dscont | Name & Description | Mfr Code | Mfr Part Number |
|---|---|---|---|---|---|---|
| C580 | 290-0522-00 | | | CAP.,FXD,ELCTLT:1UF,20%,50V | 56289 | 196D105X0050HA1 |
| C582 | 281-0593-00 | | | CAP.,FXD,CER DI:3.9PF,10%,500V | 72982 | 301-000C0J0399C |
| C589 | 290-0522-00 | | | CAP.,FXD,ELCTLT:1UF,20%,50V | 56289 | 196D105X0050HA1 |
| C590 | 281-0523-00 | | | CAP.,FXD,CER DI:100PF,+/-20PF,350V | 72982 | 301-000U2M0101M |
| C591 | 281-0629-00 | B010100 | B019999 | CAP.,FXD,CER DI:33PF,5%,600V | 72982 | 308-000C0G0330G |
| C591 | 281-0519-00 | B020000 | | CAP.,FXD,CER DI:47PF,+/-4.7PF,500V | 72982 | 308-000C0G0470K |
| C594 | 281-0166-00 | | | CAP.,VAR,AIR DI:1.9-15.7PF,250V | 74970 | 187-0109-005 |
| C595 | 283-0631-00 | | | CAP.,FXD,MICA D:95PF,1%,100V | 00853 | D151E950F0 |
| C610 | 290-0523-00 | | | CAP.,FXD,ELCTLT:2.2UF,20%,20V | 56289 | 196D225X0025HA1 |
| C611 | 281-0504-00 | | | CAP.,FXD,CER DI:10PF,+/-1PF,500V | 72982 | 301-000C0G0100F |
| C615 | 283-0051-00 | B010100 | B059999 | CAP.,FXD,CER DI:0.0033UF,5%,100V | 72982 | 8131N145C0G332J |
| C615 | 283-0000-00 | B060000 | | CAP.,FXD,CER DI:0.001UF,+100-0%,500V | 72982 | 831-516E102P |
| C616 | 281-0504-00 | | | CAP.,FXD,CER DI:10PF,+/-1PF,500V | 72982 | 301-000C0G0100F |
| C618 | 283-0059-00 | XB080000 | | CAP.,FXD,CER DI:1UF,+80-20%,25V | 72982 | 8141N038651105Z |
| C637 | 281-0518-00 | | | CAP.,FXD,CER DI:47PF,+/-9.4PF,500V | 72982 | 301-000U2J0470M |
| C638 | 281-0518-00 | | | CAP.,FXD,CER DI:47PF,+/-9.4PF,500V | 72982 | 301-000U2J0470M |
| C639 | 283-0003-00 | | | CAP.,FXD,CER DI:0.01UF,+80-20%,150V | 72982 | 855-547E103Z |
| C643 | 283-0003-00 | | | CAP.,FXD,CER DI:0.01UF,+80-20%,150V | 72982 | 855-547E103Z |
| C644 | 281-0504-00 | | | CAP.,FXD,CER DI:10PF,+/-1PF,500V | 72982 | 301-000C0G0100F |
| C647 | 290-0523-00 | | | CAP.,FXD,ELCTLT:2.2UF,20%,20V | 56289 | 196D225X0025HA1 |
| C650 | 290-0522-00 | | | CAP.,FXD,ELCTLT:1UF,20%,50V | 56289 | 196D105X0050HA1 |
| C652 | 283-0003-00 | | | CAP.,FXD,CER DI:0.01UF,+80-20%,150V | 72982 | 855-547E103Z |
| C660 | 281-0504-00 | | | CAP.,FXD,CER DI:10PF,+/-1PF,500V | 72982 | 301-000C0G0100F |
| C663 | 281-0504-00 | | | CAP.,FXD,CER DI:10PF,+/-1PF,500V | 72982 | 301-000C0G0100F |
| C677 | 281-0523-00 | | | CAP.,FXD,CER DI:100PF,+/-20PF,350V | 72982 | 301-000U2M0101M |
| C678 | 281-0518-00 | | | CAP.,FXD,CER DI:47PF,+/-9.4PF,500V | 72982 | 301-000U2J0470M |
| C679 | 290-0522-00 | | | CAP.,FXD,ELCTLT:1UF,20%,50V | 56289 | 196D105X0050HA1 |
| C680 | 283-0000-00 | | | CAP.,FXD,CER DI:0.001UF,+100-0%,500V | 72982 | 831-516E102P |
| C683 | 281-0544-00 | | | CAP.,FXD,CER DI:5.6PF,10%,500V | 72982 | 301-000C0H0569D |
| C689 | 281-0504-00 | | | CAP.,FXD,CER DI:10PF,+/-1PF,500V | 72982 | 301-000C0G0100F |
| C690 | 283-0631-00 | | | CAP.,FXD,MICA D:95PF,1%,100V | 00853 | D151E950F0 |
| C691 | 281-0166-00 | | | CAP.,VAR,AIR DI:1.9-15.7PF,250V | 74970 | 187-0109-005 |
| C706 | 283-0000-00 | | | CAP.,FXD,CER DI:0.001UF,+100-0%,500V | 72982 | 831-516E102P |
| C708 | 283-0003-00 | | | CAP.,FXD,CER DI:0.01UF,+80-20%,150V | 72982 | 855-547E103Z |
| C710 | 283-0000-00 | | | CAP.,FXD,CER DI:0.001UF,+100-0%,500V | 72982 | 831-516E102P |
| C713 | 283-0003-00 | | | CAP.,FXD,CER DI:0.01UF,+80-20%,150V | 72982 | 855-547E103Z |
| C716 | 283-0003-00 | | | CAP.,FXD,CER DI:0.01UF,+80-20%,150V | 72982 | 855-547E103Z |
| C718 | 290-0522-00 | | | CAP.,FXD,ELCTLT:1UF,20%,50V | 56289 | 196D105X0050HA1 |
| C728 | 283-0000-00 | | | CAP.,FXD,CER DI:0.001UF,+100-0%,500V | 72982 | 831-516E102P |
| C731 | 283-0000-00 | | | CAP.,FXD,CER DI:0.001UF,+100-0%,500V | 72982 | 831-516E102P |
| C768 | 281-0612-00 | | | CAP.,FXD,CER DI:5.6PF,+/-0.5PF,500V | 72982 | 374-001C0H0569D |
| C800 | 290-0522-00 | | | CAP.,FXD,ELCTLT:1UF,20%,50V | 56289 | 196D105X0050HA1 |
| C801 | 290-0529-00 | B010100 | B049999 | CAP.,FXD,ELCTLT:47UF,20%,20V | 56289 | 196D476X0020LA3 |
| C801 | 290-0134-00 | B050000 | B119999 | CAP.,FXD,ELCTLT:22UF,20%,15V | 56289 | 150D226X0015B2 |
| C801 | 290-0162-00 | B120000 | | CAP.,FXD,ELECT.:22UF,20%,35V | 12954 | D22C35M1 |
| C803 | 283-0003-00 | | | CAP.,FXD,CER DI:0.01UF,+80-20%,150V | 72982 | 855-547E103Z |
| C804 | 290-0535-00 | | | CAP.,FXD,ELCTLT:33UF,20%,10V | 56289 | 196D336X0010KA1 |
| C806 | 290-0522-00 | | | CAP.,FXD,ELCTLT:1UF,20%,50V | 56289 | 196D105X0050HA1 |
| C807 | 290-0529-00 | B010100 | B049999 | CAP.,FXD,ELCTLT:47UF,20%,20V | 90201 | TDC686M006NLF |
| C807 | 290-0134-00 | B050000 | B119999 | CAP.,FXD,ELCTLT:22UF,20%,15V | 56289 | 150D226X0015B2 |
| C807 | 290-0162-00 | B120000 | | CAP.,FXD,ELECT.:22UF,20%,35V | 12954 | D22C35M1 |
| C809 | 283-0003-00 | | | CAP.,FXD,CER DI:0.01UF,+80-20%,150V | 72982 | 855-547E103Z |

| Ckt No. | Tektronix Part No. | Serial/Model No. Eff | Dscont | Name & Description | Mfr Code | Mfr Part Number |
|---|---|---|---|---|---|---|
| CR31 | 152-0141-02 | | | SEMICOND DEVICE:SILICON,30V,150MA | 07910 | 1N4152 |
| CR109 | 152-0141-02 | | | SEMICOND DEVICE:SILICON,30V,150MA | 07910 | 1N4152 |
| CR182[1] | 152-0075-00 | | | SEMICOND DEVICE:GE,25V,40MA | 14936 | G0238 |
| CR184[1] | 152-0141-02 | | | SEMICOND DEVICE:SILICON,30V,150MA | 07910 | 1N4152 |
| CR185[1] | 152-0141-02 | | | SEMICOND DEVICE:SILICON,30V,150MA | 07910 | 1N4152 |
| CR186[1] | 152-0141-02 | | | SEMICOND DEVICE:SILICON,30V,150MA | 07910 | 1N4152 |
| CR187[1] | 152-0141-02 | | | SEMICOND DEVICE:SILICON,30V,150MA | 07910 | 1N4152 |
| CR188[1] | 152-0141-02 | | | SEMICOND DEVICE:SILICON,30V,150MA | 07910 | 1N4152 |
| CR201 | 152-0141-02 | | | SEMICOND DEVICE:SILICON,30V,150MA | 07910 | 1N4152 |
| CR220 | 152-0141-02 | | | SEMICOND DEVICE:SILICON,30V,150MA | 07910 | 1N4152 |
| CR255 | 152-0141-02 | | | SEMICOND DEVICE:SILICON,30V,150MA | 07910 | 1N4152 |
| CR257 | 152-0141-02 | | | SEMICOND DEVICE:SILICON,30V,150MA | 07910 | 1N4152 |
| CR263 | 152-0141-02 | | | SEMICOND DEVICE:SILICON,30V,150MA | 07910 | 1N4152 |
| CR265 | 152-0141-02 | | | SEMICOND DEVICE:SILICON,30V,150MA | 07910 | 1N4152 |
| CR267 | 152-0141-02 | | | SEMICOND DEVICE:SILICON,30V,150MA | 07910 | 1N4152 |
| CR275 | 152-0141-02 | | | SEMICOND DEVICE:SILICON,30V,150MA | 07910 | 1N4152 |
| CR280 | 152-0141-02 | | | SEMICOND DEVICE:SILICON,30V,150MA | 07910 | 1N4152 |
| CR281 | 152-0141-02 | | | SEMICOND DEVICE:SILICON,30V,150MA | 07910 | 1N4152 |
| CR283 | 152-0141-02 | | | SEMICOND DEVICE:SILICON,30V,150MA | 07910 | 1N4152 |
| CR285 | 152-0141-02 | | | SEMICOND DEVICE:SILICON,30V,150MA | 07910 | 1N4152 |
| CR288 | 152-0141-02 | | | SEMICOND DEVICE:SILICON,30V,150MA | 07910 | 1N4152 |
| CR307 | 152-0141-02 | | | SEMICOND DEVICE:SILICON,30V,150MA | 07910 | 1N4152 |
| CR308[1] | 152-0141-02 | XB035836 | | SEMICOND DEVICE:SILICON,30V,150MA | 07910 | 1N4152 |
| CR308[2] | 152-0141-02 | XB134215 | | SEMICOND DEVICE:SILICON,30V,150MA | 07910 | 1N4152 |
| CR340 | 152-0141-02 | | | SEMICOND DEVICE:SILICON,30V,150MA | 07910 | 1N4152 |
| CR343 | 152-0141-02 | | | SEMICOND DEVICE:SILICON,30V,150MA | 07910 | 1N4152 |
| CR361 | 152-0141-02 | | | SEMICOND DEVICE:SILICON,30V,150MA | 07910 | 1N4152 |
| CR365 | 152-0141-02 | | | SEMICOND DEVICE:SILICON,30V,150MA | 07910 | 1N4152 |
| CR409 | 152-0141-02 | | | SEMICOND DEVICE:SILICON,30V,150MA | 07910 | 1N4152 |
| CR410[1] | 152-0141-02 | XB135836 | | SEMICOND DEVICE:SILICON,30V,150MA | 07910 | 1N4152 |
| CR410[2] | 152-0141-02 | XB134215 | | SEMICOND DEVICE:SILICON,30V,150MA | 07910 | 1N4152 |
| CR440 | 152-0141-02 | | | SEMICOND DEVICE:SILICON,30V,150MA | 07910 | 1N4152 |
| CR443 | 152-0141-02 | | | SEMICOND DEVICE:SILICON,30V,150MA | 07910 | 1N4152 |
| CR461 | 152-0141-02 | | | SEMICOND DEVICE:SILICON,30V,150MA | 07910 | 1N4152 |
| CR465 | 152-0141-02 | | | SEMICOND DEVICE:SILICON,30V,150MA | 07910 | 1N4152 |
| CR504 | 152-0141-02 | | | SEMICOND DEVICE:SILICON,30V,150MA | 07910 | 1N4152 |
| CR505 | 152-0141-02 | | | SEMICOND DEVICE:SILICON,30V,150MA | 07910 | 1N4152 |
| CR513 | 152-0141-02 | | | SEMICOND DEVICE:SILICON,30V,150MA | 07910 | 1N4152 |
| CR516 | 152-0141-02 | | | SEMICOND DEVICE:SILICON,30V,150MA | 07910 | 1N4152 |
| CR519 | 152-0141-02 | | | SEMICOND DEVICE:SILICON,30V,150MA | 07910 | 1N4152 |
| CR556 | 152-0141-02 | XB100000 | | SEMICOND DEVICE:SILICON,30V,150MA | 07910 | 1N4152 |
| CR566 | 152-0141-02 | | | SEMICOND DEVICE:SILICON,30V,150MA | 07910 | 1N4152 |
| CR582 | 152-0075-00 | | | SEMICOND DEVICE:GE,25V,40MA | 14936 | GD238 |
| CR617 | 152-0141-02 | | | SEMICOND DEVICE:SILICON,30V,150MA | 07910 | 1N4152 |
| CR624 | 152-0141-02 | | | SEMICOND DEVICE:SILICON,30V,150MA | 07910 | 1N4152 |
| CR629 | 152-0141-02 | | | SEMICOND DEVICE:SILICON,30V,150MA | 07910 | 1N4152 |
| CR635 | 152-0141-02 | | | SEMICOND DEVICE:SILICON,30V,150MA | 07910 | 1N4152 |
| CR641 | 152-0141-02 | | | SEMICOND DEVICE:SILICON,30V,150MA | 07910 | 1N4152 |
| CR648 | 152-0141-02 | | | SEMICOND DEVICE:SILICON,30V,150MA | 07910 | 1N4152 |

[1] 7B53A only.
[2] 7B53AN only.

| Ckt No. | Tektronix Part No. | Serial/Model No. Eff | Dscont | Name & Description | Mfr Code | Mfr Part Number |
|---|---|---|---|---|---|---|
| CR654 | 152-0075-00 | | | SEMICOND DEVICE:GE,25V,40MA | 14936 | G0238 |
| CR655 | 152-0141-02 | XB080000 | | SEMICOND DEVICE:SILICON,30V,150MA | 07910 | 1N4152 |
| CR661 | 152-0141-02 | | | SEMICOND DEVICE:SILICON,30V,150MA | 07910 | 1N4152 |
| CR662 | 152-0141-02 | | | SEMICOND DEVICE:SILICON,30V,150MA | 07910 | 1N4152 |
| CR677 | 152-0141-02 | | | SEMICOND DEVICE:SILICON,30V,150MA | 07910 | 1N4152 |
| CR678 | 152-0075-00 | | | SEMICOND DEVICE:GE,25V,40MA | 14936 | GD238 |
| CR686 | 152-0307-00 | | | SEMICOND DEVICE:SILICON,300V,3A | 04713 | SSD1150 |
| CR695 | 152-0141-02 | | | SEMICOND DEVICE:SILICON,30V,150MA | 07910 | 1N4152 |
| CR697 | 152-0141-02 | | | SEMICOND DEVICE:SILICON,30V,150MA | 07910 | 1N4152 |
| CR717 | 152-0141-02 | | | SEMICOND DEVICE:SILICON,30V,150MA | 07910 | 1N4152 |
| CR728 | 152-0141-02 | | | SEMICOND DEVICE:SILICON,30V,150MA | 07910 | 1N4152 |
| CR731 | 152-0141-02 | | | SEMICOND DEVICE:SILICON,30V,150MA | 07910 | 1N4152 |
| CR735 | 152-0141-02 | | | SEMICOND DEVICE:SILICON,30V,150MA | 07910 | 1N4152 |
| CR736 | 152-0141-02 | | | SEMICOND DEVICE:SILICON,30V,150MA | 07910 | 1N4152 |
| CR743 | 152-0141-02 | | | SEMICOND DEVICE:SILICON,30V,150MA | 07910 | 1N4152 |
| CR752 | 152-0141-02 | | | SEMICOND DEVICE:SILICON,30V,150MA | 07910 | 1N4152 |
| CR776 | 152-0141-02 | | | SEMICOND DEVICE:SILICON,30V,150MA | 07910 | 1N4152 |
| CR777 | 152-0141-02 | | | SEMICOND DEVICE:SILICON,30V,150MA | 07910 | 1N4152 |
| CR901[1] | 152-0075-00 | | | SEMICOND DEVICE:GE,25V,40MA | 14936 | GD238 |
| CR903[1] | 152-0075-00 | | | SEMICOND DEVICE:GE,25V,40MA | 14936 | GD238 |
| CR905[1] | 152-0075-00 | | | SEMICOND DEVICE:GE,25V,40MA | 14936 | GD238 |
| CR907[1] | 152-0075-00 | | | SEMICOND DEVICE:GE,25V,40MA | 14936 | GD238 |
| CR909[1] | 152-0075-00 | | | SEMICOND DEVICE:GE,25V,40MA | 14936 | GD238 |
| CR911[1] | 152-0075-00 | | | SEMICOND DEVICE:GE,25V,40MA | 14936 | GD238 |
| CR913[1] | 152-0075-00 | | | SEMICOND DEVICE:GE,25V,40MA | 14936 | GD238 |
| CR915[1] | 152-0075-00 | | | SEMICOND DEVICE:GE,25V,40MA | 14936 | GD238 |
| CR917[1] | 152-0075-00 | | | SEMICOND DEVICE:GE,25V,40MA | 14936 | GD238 |
| CR919[1] | 152-0075-00 | | | SEMICOND DEVICE:GE,25V,40MA | 14936 | GD238 |
| CR921[1] | 152-0075-00 | | | SEMICOND DEVICE:GE,25V,40MA | 14936 | GD238 |
| CR923[1] | 152-0075-00 | | | SEMICOND DEVICE:GE,25V,40MA | 14936 | GD238 |
| DS8 | 150-0048-01 | | | LAMP,INCAND:NO.683,SELECTED | 08806 | 683AS15 |
| DS30 | 150-0048-01 | | | LAMP,INCAND:NO.683,SELECTED | 08806 | 683AS15 |
| J1 | 131-0955-00 | | | CONNECTOR,RCPT,:BNC,FEMALE | 24931 | 28JR200-1 |
| J3 | 131-0955-00 | | | CONNECTOR,RCPT,:BNC,FEMALE | 24931 | 28JR200-1 |
| L231 | 120-0382-00 | | | XFMR,TOROID:14 TURNS,SINGLE | 80009 | 120-0382-00 |
| L235 | 120-0382-00 | | | XFMR,TOROID:14 TURNS,SINGLE | 80009 | 120-0382-00 |
| L239 | 120-0382-00 | | | XFMR,TOROID:14 TURNS,SINGLE | 80009 | 120-0382-00 |
| L243 | 120-0382-00 | | | XFMR,TOROID:14 TURNS,SINGLE | 80009 | 120-0382-00 |
| L330 | 276-0507-00 | | | SHIELDING BEAD,:0.6UH | 78488 | 57-0180-7D |
| L431 | 276-0507-00 | | | SHIELDING BEAD,:0.6UH | 78488 | 57-0180-7D |
| LR580 | 108-0333-00 | | | COIL,RF:0.9UH | 80009 | 108-0333-00 |
| LR650 | 108-0333-00 | | | COIL,RF:0.9UH | 80009 | 108-0333-00 |
| Q52 | 151-0223-00 | | | TRANSISTOR:SILICON,NPN | 80009 | 151-0223-00 |
| Q61 | 151-0223-00 | | | TRANSISTOR:SILICON,NPN | 80009 | 151-0223-00 |
| Q66 | 151-0190-00 | | | TRANSISTOR:SILICON,NPN | 80009 | 151-0190-00 |
| Q70 | 151-0220-00 | | | TRANSISTOR:SILICON,PNP | 80009 | 151-0220-00 |
| Q212 | 151-0341-00 | | | TRANSISTOR:SILICON,NPN | 07263 | 2N3565 |
| Q261 | 151-0341-00 | B010100 | B049999 | TRANSISTOR:SILICON,NPN | 07263 | 2N3565 |
| Q261 | 151-0302-00 | B050000 | | TRANSISTOR:SILICON,NPN | 04713 | 2N2222A |
| Q262 | 151-0341-00 | | | TRANSISTOR:SILICON,NPN | 07263 | 2N3565 |
| Q271 | 151-0341-00 | | | TRANSISTOR:SILICON,NPN | 07263 | 2N3565 |

[1] 7B53A only.

| Ckt No. | Tektronix Part No. | Serial/Model No. Eff | Dscont | Name & Description | Mfr Code | Mfr Part Number |
|---|---|---|---|---|---|---|
| Q279 | 151-0341-00 | B010100 | B049999 | TRANSISTOR:SILICON,NPN | 07263 | 2N3565 |
| Q279 | 151-0302-00 | B050000 | | TRANSISTOR:SILICON,NPN | 04713 | 2N2222A |
| Q280 | 151-0220-00 | | | TRANSISTOR:SILICON,PNP | 80009 | 151-0220-00 |
| Q310<br>Q311 | 151-1042-00 | | | SEMICOND DVC SE:MATCHED PAIR FET | 80009 | 151-1042-00 |
| Q315 | 151-0221-00 | | | TRANSISTOR:SILICON,PNP | 80009 | 151-0221-00 |
| Q320 | 151-0367-00 | | | TRANSISTOR:SILICON,NPN,SEL FROM 3571TP | 80009 | 151-0367-00 |
| Q322 | 151-0367-00 | | | TRANSISTOR:SILICON,NPN,SEL FROM 3571TP | 80009 | 151-0367-00 |
| Q366 | 151-0223-00 | | | TRANSISTOR:SILICON,NPN | 80009 | 151-0223-00 |
| Q382 | 151-0188-00 | | | TRANSISTOR:SILICON,PNP | 04713 | 2N3906 |
| Q411<br>Q412 | 151-1042-00 | | | SEMICOND DVC SE:MATCHED PAIR FET | 80009 | 151-1042-00 |
| Q415 | 151-0221-00 | | | TRANSISTOR:SILICON,PNP | 80009 | 151-0221-00 |
| Q420 | 151-0367-00 | | | TRANSISTOR:SILICON,NPN,SEL FROM 3571TP | 80009 | 151-0367-00 |
| Q422 | 151-0367-00 | | | TRANSISTOR:SILICON,NPN,SEL FROM 3571TP | 80009 | 151-0367-00 |
| Q466 | 151-0223-00 | | | TRANSISTOR:SILICON,NPN | 80009 | 151-0223-00 |
| Q482 | 151-0188-00 | | | TRANSISTOR:SILICON,PNP | 04713 | 2N3906 |
| Q513 | 151-0188-00 | | | TRANSISTOR:SILICON,PNP | 04713 | 2N3906 |
| Q516 | 151-0190-00 | | | TRANSISTOR:SILICON,NPN | 80009 | 151-0190-00 |
| Q524 | 151-0301-00 | | | TRANSISTOR:SILICON,PNP | 04713 | 2N2907A |
| Q528 | 151-0221-00 | | | TRANSISTOR:SILICON,PNP | 80009 | 151-0221-00 |
| Q538 | 151-0190-00 | | | TRANSISTOR:SILICON,NPN | 80009 | 151-0190-00 |
| Q544 | 151-0223-00 | | | TRANSISTOR:SILICON,NPN | 80009 | 151-0223-00 |
| Q547 | 151-0223-00 | | | TRANSISTOR:SILICON,NPN | 80009 | 151-0223-00 |
| Q551 | 151-0190-00 | | | TRANSISTOR:SILICON,NPN | 80009 | 151-0190-00 |
| Q560 | 151-0190-00 | | | TRANSISTOR:SILICON,NPN | 80009 | 151-0190-00 |
| Q562 | 151-0188-00 | | | TRANSISTOR:SILICON,PNP | 04713 | 2N3906 |
| Q564 | 151-0220-00 | | | TRANSISTOR:SILICON,PNP | 80009 | 151-0220-00 |
| Q568 | 151-0220-00 | | | TRANSISTOR:SILICON,PNP | 80009 | 151-0220-00 |
| Q584 | 151-0221-00 | | | TRANSISTOR:SILICON,PNP | 80009 | 151-0221-00 |
| Q596 | 151-1004-00 | | | TRANSISTOR:SILICON,JFE,N-CHANNEL | 15818 | U1489 |
| Q603 | 151-0223-00 | | | TRANSISTOR:SILICON,NPN | 80009 | 151-0223-00 |
| Q608 | 151-0223-00 | | | TRANSISTOR:SILICON,NPN | 80009 | 151-0223-00 |
| Q610 | 151-0190-00 | | | TRANSISTOR:SILICON,NPN | 80009 | 151-0190-00 |
| Q620 | 151-0221-00 | | | TRANSISTOR:SILICON,PNP | 80009 | 151-0221-00 |
| Q628 | 151-0192-00 | | | TRANSISTOR:SILICON,NPN,SEL FROM MPS6521 | 80009 | 151-0192-00 |
| Q633 | 151-0190-00 | | | TRANSISTOR:SILICON,NPN | 80009 | 151-0190-00 |
| Q639 | 151-0223-00 | | | TRANSISTOR:SILICON,NPN | 80009 | 151-0223-00 |
| Q642 | 151-0223-00 | | | TRANSISTOR:SILICON,NPN | 80009 | 151-0223-00 |
| Q647 | 151-0221-00 | | | TRANSISTOR:SILICON,PNP | 80009 | 151-0221-00 |
| Q654 | 151-0221-00 | | | TRANSISTOR:SILICON,PNP | 80009 | 151-0221-00 |
| Q656 | 151-0220-00 | | | TRANSISTOR:SILICON,PNP | 80009 | 151-0220-00 |
| Q659 | 151-0223-00 | | | TRANSISTOR:SILICON,NPN | 80009 | 151-0223-00 |
| Q665 | 151-0223-00 | | | TRANSISTOR:SILICON,NPN | 80009 | 151-0223-00 |
| Q671 | 151-0220-00 | | | TRANSISTOR:SILICON,PNP | 80009 | 151-0220-00 |
| Q678 | 151-0289-00 | | | TRANSISTOR:SILICON,PNP | 04713 | SS106 |
| Q682 | 151-0190-00 | | | TRANSISTOR:SILICON,NPN | 80009 | 151-0190-00 |
| Q684 | 151-0259-00 | | | TRANSISTOR:SILICON,NPN | 80009 | 151-0259-00 |
| Q688 | 151-0259-00 | | | TRANSISTOR:SILICON,NPN | 80009 | 151-0259-00 |
| Q695 | 151-0216-00 | | | TRANSISTOR:SILICON,PNP | 04713 | MPS6523 |
| Q696 | 151-0216-00 | | | TRANSISTOR:SILICON,PNP | 04713 | MPS6523 |
| Q698 | 151-0220-00 | | | TRANSISTOR:SILICON,PNP | 80009 | 151-0220-00 |
| Q720 | 151-0192-00 | | | TRANSISTOR:SILICON,NPN,SEL FROM MPS6521 | 80009 | 151-0192-00 |

| Ckt No. | Tektronix Part No. | Serial/Model No. Eff | Dscont | Name & Description | Mfr Code | Mfr Part Number |
|---|---|---|---|---|---|---|
| Q724 | 151-0190-00 | | | TRANSISTOR:SILICON,NPN | 80009 | 151-0190-00 |
| Q734 | 151-0219-00 | | | TRANSISTOR:SILICON,PNP:SILICON,NPN | 07263 | SS22650 |
| Q754 | 151-0224-00 | | | TRANSISTOR:SILICON,NPN | 07263 | 2N3904 |
| Q764 | 151-0190-00 | | | TRANSISTOR:SILICON,NPN | 80009 | 151-0190-00 |
| R1 | 323-0452-00 | | | RES.,FXD,FILM:499K OHM,1%,0.50W | 75042 | CECT0-4993F |
| R2 | 315-0101-00 | | | RES.,FXD,CMPSN:100 OHM,5%,0.25W | 01121 | CB1015 |
| R4[1] | 311-1192-00 | | | RES.,VAR,NONWIR:10K OHM,20%,1W | 12637 | 381-CM39695 |
| R5[2] | 311-1322-00 | | | RES.,VAR,NONWIR:5K OHM,10%,1W | 12697 | 381-CM39701 |
| R8 | 311-1162-00 | | | RES.,VAR,NONWIR:2 X 10K OHM,10%,1W | 12697 | 381-CM39691 |
| R9 | 311-0946-00 | | | RES.,VAR,NONIWR:TRMR,50K OHM,2W | 02111 | 534-70 |
| R15 | 315-0470-00 | | | RES.,FXD,CMPSN:47 OHM,5%,0.25W | 01121 | CB4705 |
| R17 | 321-0448-00 | | | RES.,FXD,FILM:453K OHM,1%,0.125W | 75042 | CEAT0-4533F |
| R18 | 321-0361-00 | | | RES.,FXD,FILM:56.2K OHM,1%,0.125W | 75042 | CEAT0-5622F |
| R19 | 315-0470-00 | | | RES.,FXD,CMPSN:47 OHM,5%,0.25W | 01121 | CB4705 |
| R23 | 315-0224-00 | | | RES.,FXD,CMPSN:220K OHM,5%,0.25W | 01121 | CB2245 |
| R25 | 315-0333-00 | | | RES.,FXD,CMPSN:33K OHM,5%,0.25W | 01121 | CB3335 |
| R29 | 315-0101-00 | | | RES.,FXD,CMPSN:100 OHM,5%,0.25W | 01121 | CB1015 |
| R41 | 315-0101-00 | | | RES.,FXD,CMPSN:100 OHM,5%,0.25W | 01121 | CB1015 |
| R42 | 323-0452-00 | | | RES.,FXD,FILM:499K OHM,1%,0.50W | 75042 | CECT0-4993F |
| R43 | 315-0101-00 | | | RES.,FXD,CMPSN:100 OHM,5%,0.25W | 01121 | CB1015 |
| R50 | 321-0071-00 | | | RES.,FXD,FILM:53.6 OHM,1%,0.125W | 75042 | CEAT0-53R6F |
| R52[3] | 321-0126-00 | | | RES.,FXD,FILM:200 OHM,1%,0.125W | 75042 | CEAT0-2000F |
| R52[4] | 315-0431-00 | B010100 | B019999 | RES.,FXD,CMPSN:430 OHM,5%,0.25W | 01121 | CB4315 |
| R52[4] | 321-0126-00 | B020000 | | RES.,FXD,FILM:200 OHM,1%,0.125W | 75042 | CEAT0-2000F |
| R54 | 321-0020-00 | | | RES.,FXD,FILM:15.8 OHM,1%,0.125W | 75042 | CEAT0-15R80F |
| R56 | 323-0151-00 | | | RES.,FXD,FILM:365 OHM,1%,0.50W | 75042 | CECT0-3650F |
| R58 | 321-0020-00 | | | RES.,FXD,FILM:15.8 OHM,1%,0.125W | 75042 | CEAT0-15R80F |
| R59 | 321-0071-00 | | | RES.,FXD,FILM:53.6 OHM,1%,0.125W | 75042 | CEAT0-53R6F |
| R60[3] | 315-0121-00 | | | RES.,FXD,CMPSN:120 OHM,5%,0.25W | 01121 | CB1215 |
| R60[4] | 315-0121-00 | XB020000 | | RES.,FXD,CMPSN:120 OHM,5%,0.25W | 01121 | CB1215 |
| R61[3] | 321-0126-00 | | | RES.,FXD,FILM:200 OHM,1%,0.125W | 75042 | CEAT0-2000F |
| R61[4] | 321-0158-00 | B010100 | B019999 | RES.,FXD,FILM:432 OHM,1%,0.125W | 75042 | CEAT0-4320F |
| R61[4] | 321-0126-00 | B020000 | | RES.,FXD,FILM:200 OHM,1%,0.125W | 75042 | CEAT0-2000F |
| R62 | 315-0101-00 | | | RES.,FXD,CMPSN:100 OHM,5%,0.25W | 01121 | CB1015 |
| R63 | 321-0237-00 | | | RES.,FXD,FILM:2.87K OHM,1%,0.125W | 75042 | CEAT0-2871F |
| R64 | 315-0821-00 | | | RES.,FXD,CMPSN:820 OHM,5%,0.25W | 01121 | CB8215 |
| R66 | 315-0101-00 | | | RES.,FXD,CMPSN:100 OHM,5%,0.25W | 01121 | CB1015 |
| R67 | 315-0510-00 | | | RES.,FXD,CMPSN:51 OHM,5%,0.25W | 01121 | CB5105 |
| R68 | 315-0201-00 | | | RES.,FXD,CMPSN:200 OHM,5%,0.25W | 01121 | CB2015 |
| R70 | 315-0101-00 | | | RES.,FXD,CMPSN:100 OHM,5%,0.25W | 01121 | CB1015 |
| R72 | 311-1227-00 | | | RES.,VAR,NONWIR:TRMR,5K OHM,0.5W | 80294 | 3389F-P31-502 |
| R73 | 321-0324-00 | | | RES.,FXD,FILM:23.2K OHM,1%,0.125W | 75042 | CEAT0-2322F |
| R74 | 321-0210-00 | | | RES.,FXD,FILM:1.5K OHM,1%,0.125W | 75042 | CEAT0-1501F |
| R76 | 315-0510-00 | | | RES.,FXD,CMPSN:51 OHM,5%,0.25W | 01121 | CB5105 |
| R80 | 315-0472-00 | | | RES.,FXD,CMPSN:4.7K OHM,5%,0.25W | 01121 | CB4725 |
| R82 | 315-0101-00 | | | RES.,FXD,CMPSN:100 OHM,5%,0.25W | 01121 | CB1015 |
| R105 | 315-0103-00 | | | RES.,FXD,CMPSN:10K OHM,5%,0.25W | 01121 | CB1035 |
| R107 | 315-0623-00 | | | RES.,FXD,CMPSN:62K OHM,5%,0.25W | 01121 | CB6235 |
| R109 | 315-0624-00 | | | RES.,FXD,CMPSN:620K OHM,5%,0.25W | 01121 | CB6245 |
| R110 | 325-0082-00 | B010100 | B160099 | RES.,FXD,FILM:33.51 MEG OHM,0.1%,1W | 03888 | RN75E33514B |
| R110 | 325-0082-03 | B160100 | | RES.,FXD,FILM:33.51 MEG OHM,0.25%,1W | | |
| R112 | 325-0081-00 | | | RES.,FXD,FILM:11.17 MEG OHM,0.1%,0.5W | 03888 | RN70E11174B |
| R114 | 325-0081-00 | | | RES.,FXD,FILM:11.17 MEG OHM,0.1%,0.5W | 03888 | RN70E11174B |
| R117 | 325-0080-00 | | | RES.,FXD,FILM:3.351 MEG OHM,0.1%,0.5W | 03888 | RN70E33513B |

[1]Furnished as a unit with S4.
[2]Furnished as a unit with S5.
[3]7B53A only.
[4]7B53AN only.

| Ckt No. | Tektronix Part No. | Serial/Model No. Eff | Dscont | Name & Description | Mfr Code | Mfr Part Number |
|---|---|---|---|---|---|---|
| R119 | 323-0789-07 | | | RES.,FXD,FILM:1.117 MEG OHM,0.1%,0.5W | 75042 | CECT911173B |
| R121 | 323-0789-07 | | | RES.,FXD,FILM:1.117 MEG OHM,0.1%,0.5W | 75042 | CECT911173B |
| R124 | 323-0788-07 | | | RES.,FXD,FILM:558.5K OHM,0.1%,0.5W | 75042 | CECT955852B |
| R126 | 323-0787-07 | | | RES.,FXD,FILM:223.4K OHM,0.1%,0.5W | 75042 | CECT922342B |
| R128 | 323-0786-07 | | | RES.,FXD,FILM:111.7K OHM,0.1%,0.5W | 75042 | CECT911173B |
| R130 | 323-0785-07 | | | RES.,FXD,FILM:55.85K OHM,0.1%,0.5W | 75042 | CECT955815B |
| R139 | 315-0510-00 | | | RES.,FXD,CMPSN:51 OHM,5%,0.25W | 01121 | CB5105 |
| R141 | 315-0101-00 | | | RES.,FXD,CMPSN:100 OHM,5%,0.25W | 01121 | CB1015 |
| R144[1] | 311-1321-00 | | | RES.,VAR,NONWIR:PNL,20K OHM,1W | 01121 | 10M205A |
| R146 | 315-0103-00 | | | RES.,FXD,CMPSN:10K OHM,5%,0.25W | 01121 | CB1035 |
| R149 | 315-0510-00 | | | RES.,FXD,CMPSN:51 OHM,5%,0.25W | 01121 | CB5105 |
| R154 | 323-0785-07 | | | RES.,FXD,FILM:55.85K OHM,0.1%,0.5W | 75042 | CECT955815B |
| R156 | 323-0786-07 | | | RES.,FXD,FILM:111.7K OHM,0.1%,0.5W | 75042 | CECT911172B |
| R158 | 323-0787-07 | | | RES.,FXD,FILM:223.4K OHM,0.1%,0.5W | 75042 | CECT922342B |
| R160 | 323-0788-07 | | | RES.,FXD,FILM:558.5K OHM,0.1%,0.5W | 75042 | CECT955852B |
| R164 | 325-0080-00 | | | RES.,FXD,FILM:3.351 MEG OHM,0.1%,0.5W | 75042 | RN70E33513B |
| R166 | 323-0789-07 | | | RES.,FXD,FILM:1.117 MEG OHM,0.1%,0.5W | 75042 | CECT911173B |
| R168 | 323-0789-07 | | | RES.,FXD,FILM:1.117 MEG OHM,0.1%,0.5W | 75042 | CECT911173B |
| R170 | 325-0082-00 | B010100 | B160099 | RES.,FXD,FILM:33.51 MEG OHM,0.1%,1W | 75042 | RN75E33514B |
| R170 | 325-0082-03 | B160100 | | RES.,FXD,FILM:33.51 MEG OHM,0.25%,1W | | |
| R172 | 325-0081-00 | | | RES.,FXD,FILM:11.17 MEG OHM,0.1%,0.5W | 75042 | RN70E11174B |
| R174 | 325-0081-00 | | | RES.,FXD,FILM:11.17 MEG OHM,0.1%,0.5W | 75042 | RN70E11174B |
| R181[2] | 315-0151-00 | XB150000 | | RES.,FXD,CMPSN:150 OHM,5%,0.25W | 01121 | CB1515 |
| R182[2] | 315-0133-00 | | | RES.,FXD,CMPSN:13K OHM,5%,0.25W | 01121 | CB1335 |
| R184[2] | 315-0332-00 | | | RES.,FXD,CMPSN:3.3K OHM,5%,0.25W | 01121 | CB3325 |
| R185[2] | 315-0332-00 | | | RES.,FXD,CMPSN:3.3K OHM,5%,0.25W | 01121 | CB3325 |
| R186[2] | 315-0332-00 | | | RES.,FXD,CMPSN:3.3K OHM,5%,0.25W | 01121 | CB3325 |
| R188[2] | 315-0332-00 | | | RES.,FXD,CMPSN:3.3K OHM,5%,0.25W | 01121 | CB3325 |
| R205 | 315-0470-00 | | | RES.,FXD,CMPSN:47 OHM,5%,0.25W | 01121 | CB4705 |
| R210 | 315-0103-00 | | | RES.,FXD,CMPSN:10K OHM,5%,0.25W | 01121 | CB1035 |
| R211 | 315-0203-00 | | | RES.,FXD,CMPSN:20K OHM,5%,0.25W | 01121 | CB2035 |
| R231 | 315-0101-00 | | | RES.,FXD,CMPSN:100 OHM,5%,0.25W | 01121 | CB1015 |
| R235 | 315-0101-00 | | | RES.,FXD,CMPSN:100 OHM,5%,0.25W | 01121 | CB1015 |
| R239 | 315-0101-00 | | | RES.,FXD,CMPSN:100 OHM,5%,0.25W | 01121 | CB1015 |
| R243 | 315-0101-00 | | | RES.,FXD,CMPSN:100 OHM,5%,0.25W | 01121 | CB1015 |
| R258 | 315-0103-00 | B010100 | B049999 | RES.,FXD,CMPSN:10K OHM,5%,0.25W | 01121 | CB1035 |
| R258 | 315-0272-00 | B050000 | | RES.,FXD,CMPSN:2.7K OHM,5%,0.25W | 01121 | CB2725 |
| R259 | 315-0203-00 | B010100 | B049999 | RES.,FXD,CMPSN:20K OHM,5%,0.25W | 01121 | CB2035 |
| R259 | 315-0202-00 | B050000 | | RES.,FXD,CMPSN:2K OHM,5%,0.25W | 01121 | CB2025 |
| R261 | 315-0203-00 | | | RES.,FXD,CMPSN:20K OHM,5%,0.25W | 01121 | CB2035 |
| R262 | 315-0103-00 | | | RES.,FXD,CMPSN:10K OHM,5%,0.25W | 01121 | CB1035 |
| R263 | 315-0203-00 | | | RES.,FXD,CMPSN:20K OHM,5%,0.25W | 01121 | CB2035 |
| R264 | 315-0203-00 | | | RES.,FXD,CMPSN:20K OHM,5%,0.25W | 01121 | CB2035 |
| R268 | 315-0103-00 | | | RES.,FXD,CMPSN:10K OHM,5%,0.25W | 01121 | CB1035 |
| R269 | 315-0203-00 | | | RES.,FXD,CMPSN:20K OHM,5%,0.25W | 01121 | CB2035 |
| R271 | 315-0104-00 | | | RES.,FXD,CMPSN:100K OHM,5%,0.25W | 01121 | CB1045 |
| R276 | 315-0103-00 | B010100 | B049999 | RES.,FXD,CMPSN:10K OHM,5%,0.25W | 01121 | CB1035 |
| R276 | 315-0272-00 | B050000 | | RES.,FXD,CMPSN:2.7K OHM,5%,0.25W | 01121 | CB2725 |
| R277 | 315-0203-00 | B010100 | B049999 | RES.,FXD,CMPSN:20K OHM,5%,0.25W | 01121 | CB2035 |
| R277 | 315-0202-00 | B050000 | | RES.,FXD,CMPSN:2K OHM,5%,0.25W | 01121 | CB2025 |
| R279 | 315-0104-00 | | | RES.,FXD,CMPSN:100K OHM,5%,0.25W | 01121 | CB1045 |
| R280 | 315-0103-00 | | | RES.,FXD,CMPSN:10K OHM,5%,0.25W | 01121 | CB1035 |
| R281 | 315-0203-00 | | | RES.,FXD,CMPSN:20K OHM,5%,0.25W | 01121 | CB2035 |
| R290 | 311-1060-00 | | | RES.,VAR,NONWIR:TRMR,500 OHM,0.75W | 80294 | 30594-J53-501 |
| R301 | 315-0510-00 | | | RES.,FXD,CMPSN:51 OHM,5%,0.25W | 01121 | CB5105 |

[1]Furnished as a unit with S144.
[2]7B53A only.

| Ckt No. | Tektronix Part No. | Serial/Model No. Eff | Dscont | Name & Description | Mfr Code | Mfr Part Number |
|---|---|---|---|---|---|---|
| R303 | 321-0452-00 | | | RES.,FXD,FILM:499K OHM,1%,0.125W | 75042 | CEAT0-4993F |
| R307[1] | 315-0512-00 | B010100 | B135835X | RES.,FXD,CMPSN:5.1K OHM,5%,0.25W | 01121 | CB5125 |
| R307[2] | 315-0512-00 | B010100 | B134214X | RES.,FXD,CMPSN:5.1K OHM,5%,0.25W | 01121 | CB5125 |
| R310 | 315-0511-00 | | | RES.,FXD,CMPSN:510 OHM,5%,0.25W | 01121 | CB5115 |
| R311 | 315-0101-00 | | | RES.,FXD,CMPSN:100 OHM,5%,0.25W | 01121 | CB1015 |
| R312 | 315-0431-00 | | | RES.,FXD,CMPSN:430 OHM,5%,0.25W | 01121 | CB4315 |
| R313 | 315-0101-00 | | | RES.,FXD,CMPSN:100 OHM,5%,0.25W | 01121 | CB1015 |
| R315 | 315-0102-00 | | | RES.,FXD,CMPSN:1K OHM,5%,0.25W | 01121 | CB1025 |
| R317 | 315-0751-00 | | | RES.,FXD,CMPSN:750 OHM,5%,0.25W | 01121 | CB7515 |
| R320 | 315-0221-00 | B010100 | B129999 | RES.,FXD,CMPSN:220 OHM,5%,0.25W | 01121 | CB2215 |
| R320 | 315-0331-00 | B130000 | | RES.,FXD,CMPSN:330 OHM,5%,0.25W | 01121 | CB3315 |
| R322 | 315-0221-00 | B010100 | B129999 | RES.,FXD,CMPSN:220 OHM,5%,0.25W | 01121 | CB2215 |
| R322 | 315-0331-00 | B130000 | | RES.,FXD,CMPSN:330 OHM,5%,0.25W | 01121 | CB3315 |
| R325 | 315-0150-00 | B010100 | B079999 | RES.,FXD,CMPSN:15 OHM,5%,0.25W | 01121 | CB1505 |
| R325 | 315-0100-00 | B070000 | | RES.,FXD,CMPSN:10 OHM,5%,0.25W | 01121 | CB1005 |
| R326 | 315-0122-00 | B010100 | B129999 | RES.,FXD,CMPSN:1.2K OHM,5%,0.25W | 01121 | CB1225 |
| R326 | 315-0162-00 | B130000 | | RES.,FXD,CMPSN:1.6K OHM,5%,0.25W | 01121 | CB1625 |
| R328 | 315-0150-00 | B010100 | B069999 | RES.,FXD,CMPSN:15 OHM,5%,0.25W | 01121 | CB1505 |
| R328 | 315-0100-00 | B070000 | | RES.,FXD,CMPSN:10 OHM,5%,0.25W | 01121 | CB1005 |
| R330 | 315-0102-00 | | | RES.,FXD,CMPSN:1K OHM,5%,0.25W | 01121 | CB1025 |
| R332 | 315-0472-00 | | | RES.,FXD,CMPSN:4.7K OHM,5%,0.25W | 01121 | CB4725 |
| R333 | 311-1228-00 | | | RES.,VAR,NONWIR:10K OHM,20%,0.50W | 80294 | 3389F-P31-103 |
| R335 | 315-0152-00 | | | RES.,FXD,CMPSN:1.5K OHM,5%,0.25W | 01121 | CB1525 |
| R339 | 315-0431-00 | | | RES.,FXD,CMPSN:430 OHM,5%,0.25W | 01121 | CB4315 |
| R339 | 315-0431-00 | XB020000 | | RES.,FXD,CMPSN:430 OHM,5%,0.25W | 01121 | CB4315 |
| R340[1] | 315-0201-00 | B010100 | B147117 | RES.,FXD,CMPSN:200 OHM,5%,0.25W | 01121 | CB2015 |
| R340[1] | 315-0120-00 | B147118 | | RES.,FXD,CMPSN:12 OHM,5%,0.25W | 01121 | CB1205 |
| R340[2] | 315-0201-00 | B010100 | B144429 | RES.,FXD,CMPSN:200 OHM,5%,0.25W | 01121 | CB2015 |
| R340[2] | 315-0120-00 | B144430 | | RES.,FXD,CMPSN:12 OHM,5%,0.25W | 01121 | CB1205 |
| R341 | 315-0242-00 | | | RES.,FXD,CMPSN:2.4K OHM,5%,0.25W | 01121 | CB2425 |
| R342[1] | 315-0431-00 | | | RES.,FXD,CMPSN:430 OHM,5%,0.25W | 01121 | CB4315 |
| R342[2] | 315-0431-00 | XB020000 | | RES.,FXD,CMPSN:430 OHM,5%,0.25W | 01121 | CB4315 |
| R343 | 315-0242-00 | | | RES.,FXD,CMPSN:2.4K OHM,5%,0.25W | 01121 | CB2425 |
| R344[1] | 315-0201-00 | B010100 | B147117 | RES.,FXD,CMPSN:200 OHM,5%,0.25W | 01121 | CB2015 |
| R344[1] | 315-0120-00 | B147118 | | RES.,FXD,CMPSN:12 OHM,5%,0.25W | 01121 | CB1205 |
| R344[2] | 315-0201-00 | B010100 | B144429 | RES.,FXD,CMPSN:200 OHM,5%,0.25W | 01121 | CB2015 |
| R344[2] | 315-0120-00 | B144430 | | RES.,FXD,CMPSN:12 OHM,5%,0.25W | 01121 | CB1205 |
| R345 | 315-0102-00 | | | RES.,FXD,CMPSN:1K OHM,5%,0.25W | 01121 | CB1025 |
| R346 | 315-0511-00 | | | RES.,FXD,CMPSN:510 OHM,5%,0.25W | 01121 | CB5115 |
| R347 | 315-0331-00 | | | RES.,FXD,CMPSN:330 OHM,5%,0.25W | 01121 | CB3315 |
| R352 | 317-0271-00 | B010100 | B169999 | RES.,FXD,CMPSN:270 OHM,5%,0.125W | 01121 | BB2715 |
| R352 | 315-0511-00 | B170000 | | RES.,FXD,CMPSN:510 OHM,5%,0.25W | 01121 | CB5115 |
| R354 | 317-0271-00 | B010100 | B169999 | RES.,FXD,CMPSN:270 OHM,5%,0.125W | 01121 | BB2715 |
| R354 | 315-0511-00 | B170000 | | RES.,FXD,CMPSN:510 OHM,5%,0.25W | 01121 | CB5115 |
| R357 | 317-0271-00 | B010100 | B169999 | RES.,FXD,CMPSN:270 OHM,5%,0.125W | 01121 | BB2715 |
| R357 | 315-0511-00 | B170000 | | RES.,FXD,CMPSN:510 OHM,5%,0.25W | 01121 | CB5115 |
| R359[1] | 317-0271-00 | B010100 | B169999 | RES.,FXD,CMPSN:270 OHM,5%,0.125W | 01121 | BB2715 |
| R359[1] | 315-0511-00 | B170000 | | RES.,FXD,CMPSN:510 OHM,5%,0.25W | 01121 | CB5115 |
| R359[2] | 317-0102-00 | B010100 | B019999 | RES.,FXD,CMPSN:1K OHM,5%,0.125W | 01121 | BB1025 |
| R359[2] | 317-0271-00 | B020000 | | RES.,FXD,CMPSN:270 OHM,5%,0.125W | 01121 | BB2715 |
| R361 | 315-0471-00 | | | RES.,FXD,CMPSN:470 OHM,5%,0.25W | 01121 | CB4715 |
| R363 | 315-0471-00 | | | RES.,FXD,CMPSN:470 OHM,5%,0.25W | 01121 | CB4715 |
| R364 | 315-0203-00 | | | RES.,FXD,CMPSN:20K OHM,5%,0.25W | 01121 | CB2035 |
| R366 | 315-0331-00 | | | RES.,FXD,CMPSN:330 OHM,5%,0.25W | 01121 | CB3315 |
| R367 | 315-0511-00 | | | RES.,FXD,CMPSN:510 OHM,5%,0.25W | 01121 | CB5115 |
| R374 | 317-0271-00 | B010100 | B169999 | RES.,FXD,CMPSN:270 OHM,5%,0.125W | 01121 | BB2715 |
| R374 | 315-0511-00 | B170000 | | RES.,FXD,CMPSN:510 OHM,5%,0.25W | 01121 | CB5115 |
| R375[1] | 317-0102-00 | B010100 | B169999 | RES.,FXD,CMPSN:1K OHM,5%,0.125W | 01121 | BB1025 |
| R375[1] | 315-0102-00 | B170000 | | RES.,FXD,CMPSN:1K OHM,5%,0.25W | 01121 | CB1025 |

[1] 7B53A only
[2] 7B53AN only

| Ckt No. | Tektronix Part No. | Serial/Model No. Eff | Dscont | Name & Description | Mfr Code | Mfr Part Number |
|---|---|---|---|---|---|---|
| R375[1] | 317-0102-00 | XB020000 | | RES.,FXD,CMPSN:1K OHM,5%,0125W | 01121 | BB1025 |
| R376 | 317-0271-00 | B010100 | B169999 | RES.,FXD,CMPSN:270 OHM,5%,0.125W | 01121 | BB2715 |
| R376 | 315-0271-00 | B170000 | | RES.,FXD,CMPSN:270 OHM,5%,0.25W | 01121 | CB2715 |
| R377 | 315-0271-00 | | | RES.,FXD,CMPSN:270 OHM,5%,0.25W | 01121 | CB2715 |
| R379 | 315-0751-00 | | | RES.,FXD,CMPSN:750 OHM,5%,0.25W | 01121 | CB7515 |
| R383 | 315-0331-00 | | | RES.,FXD,CMPSN:330 OHM,5%,0.25W | 01121 | CB3315 |
| R384 | 315-0511-00 | | | RES.,FXD,CMPSN:510 OHM,5%,0.25W | 01121 | CB5115 |
| R386 | 315-0361-00 | | | RES.,FXD,CMPSN:360 OHM,5%,0.25W | 01121 | CB3615 |
| R387 | 315-0620-00 | | | RES.,FXD,CMPSN:62 OHM,5%,0.25W | 01121 | CB6205 |
| R401 | 315-0510-00 | | | RES.,FXD,CMPSN:51 OHM,5%,0.25W | 01121 | CB5105 |
| R403 | 321-0452-00 | | | RES.,FXD,FILM:499K OHM,1%,0.125W | 75042 | CEAT0-4993F |
| R409[2] | 315-0512-00 | B010100 | B135835X | RES.,FXD,CMPSN:5.1K OHM,5%,0.25W | 01121 | CB5125 |
| R409[1] | 315-0512-00 | B010100 | B134214X | RES.,FXD,CMPSN:5.1K OHM,5%,0.25W | 01121 | CB5125 |
| R410 | 315-0511-00 | | | RES.,FXD,CMPSN:510 OHM,5%,0.25W | 01121 | CB5115 |
| R411 | 315-0101-00 | | | RES.,FXD,CMPSN:100 OHM,5%,0.25W | 01121 | CB1015 |
| R412 | 315-0101-00 | | | RES.,FXD,CMPSN:100 OHM,5%,0.25W | 01121 | CB1015 |
| R413 | 315-0431-00 | | | RES.,FXD,CMPSN:430 OHM,5%,0.25W | 01121 | CB4315 |
| R415 | 315-0102-00 | | | RES.,FXD,CMPSN:1K OHM,5%,0.25W | 01121 | CB1025 |
| R417 | 315-0751-00 | | | RES.,FXD,CMPSN:750 OHM,5%,0.25W | 01121 | CB7515 |
| R420 | 315-0331-00 | | | RES.,FXD,CMPSN:330 OHM,5%,0.25W | 01121 | CB3315 |
| R422 | 315-0331-00 | | | RES.,FXD,CMPSN:330 OHM,5%,0.25W | 01121 | CB3315 |
| R426 | 315-0150-00 | | | RES.,FXD,CMPSN:15 OHM,5%,0.25W | 01121 | CB1505 |
| R428 | 315-0150-00 | | | RES.,FXD,CMPSN:15 OHM,5%,0.25W | 01121 | CB1505 |
| R429 | 315-0162-00 | | | RES.,FXD,CMPSN:1.6K OHM,5%,0.25W | 01121 | CB1625 |
| R431 | 315-0511-00 | | | RES.,FXD,CMPSN:510 OHM,5%,0.25W | 01121 | CB5115 |
| R433 | 315-0242-00 | | | RES.,FXD,CMPSN:2.4K OHM,5%,0.25W | 01121 | CB2425 |
| R435 | 311-1228-00 | | | RES.,VAR,NONWIR:10K OHM,20%,0.50W | 80294 | 3389F-P31-103 |
| R437[2] | 315-0751-00 | | | RES.,FXD,CMPSN:750 OHM,5%,0.25W | 01121 | CB7515 |
| R439[2] | 315-0431-00 | | | RES.,FXD,CMPSN:430 OHM,5%,0.25W | 01121 | CB4315 |
| R439[1] | 315-0431-00 | XB020000 | | RES.,FXD,CMPSN:430 OHM,5%,0.25W | 01121 | CB4315 |
| R440 | 315-0201-00 | | | RES.,FXD,CMPSN:200 OHM,5%,0.25W | 01121 | CB2015 |
| R441[2] | 315-0242-00 | | | RES.,FXD,CMPSN:2.4K OHM,5%,0.25W | 01121 | CB2425 |
| R442[1] | 315-0431-00 | | | RES.,FXD,CMPSN:430 OHM,5%,0.25W | 01121 | CB4315 |
| R442 | 315-0431-00 | XB020000 | | RES.,FXD,CMPSN:430 OHM,5%,0.25W | 01121 | CB4315 |
| R443 | 315-0242-00 | | | RES.,FXD,CMPSN:2.4K OHM,5%,0.25W | 01121 | CB2425 |
| R444 | 315-0201-00 | | | RES.,FXD,CMPSN:200 OHM,5%,0.25W | 01121 | CB2015 |
| R445 | 315-0102-00 | | | RES.,FXD,CMPSN:1K OHM,5%,0.25W | 01121 | CB1025 |
| R446 | 315-0511-00 | | | RES.,FXD,CMPSN:510 OHM,5%,0.25W | 01121 | CB5115 |
| R447 | 315-0331-00 | | | RES.,FXD,CMPSN:330 OHM,5%,0.25W | 01121 | CB3315 |
| R452 | 317-0271-00 | B010100 | B169999 | RES.,FXD,CMPSN:270 OHM,5%,0.125W | 01121 | BB2715 |
| R452 | 315-0511-00 | B170000 | | RES.,FXD,CMPSN:510 OHM,5%,0.25W | 01121 | CB5115 |
| R454 | 317-0271-00 | B010100 | B169999 | RES.,FXD,CMPSN:270 OHM,5%,0.125W | 01121 | BB2715 |
| R454 | 315-0511-00 | B170000 | | RES.,FXD,CMSPN:510 OHM,5%,0.25W | 01121 | CB5115 |
| R457 | 317-0751-00 | B010100 | B169999 | RES.,FXD,CMPSN:750 OHM,5%,0.125W | 01121 | BB7515 |
| R457 | 315-0511-00 | B170000 | | RES.,FXD,CMPSN:510 OHM,5%,0.25W | 01121 | CB5115 |
| R459[2] | 317-0271-00 | B010100 | B169999 | RES.,FXD,CMPSN:270 OHM,5%,0.125W | 01121 | BB2715 |
| R459[2] | 315-0511-00 | B170000 | | RES.,FXD,CMPSN:510 OHM,5%,0.25W | 01121 | CB5115 |
| R459[1] | 317-0102-00 | B010100 | B019999 | RES.,FXD,CMPSN:1K OHM,5%,0125W | 01121 | BB1025 |
| R459[1] | 317-0271-00 | B020000 | | RES.,FXD,CMPSN:270 OHM,5%,0.125W | 01121 | BB2715 |
| R461 | 315-0471-00 | | | RES.,FXD,CMPSN:470 OHM,5%,0.25W | 01121 | CB4715 |
| R463 | 315-0471-00 | | | RES.,FXD,CMPSN:470 OHM,5%,0.25W | 01121 | CB4715 |
| R464 | 315-0203-00 | | | RES.,FXD,CMPSN:20K OHM,5%,0.25W | 01121 | CB2035 |
| R466 | 315-0331-00 | | | RES.,FXD,CMPSN:330 OHM,5%,0.25W | 01121 | CB3315 |
| R467 | 315-0511-00 | | | RES.,FXD,CMPSN:510 OHM,5%,0.25W | 01121 | CB5115 |
| R468 | 315-0331-00 | | | RES.,FXD,CMPSN:330 OHM,5%,0.25W | 01121 | CB3315 |
| R469 | 315-0511-00 | | | RES.,FXD,CMPSN:510 OHM,5%,0.25W | 01121 | CB5115 |
| R474 | 317-0271-00 | B010100 | B169999 | RES.,FXD,CMPSN:270 OHM,5%,0.125W | 01121 | BB2715 |
| R474 | 315-0511-00 | B170000 | | RES.,FXD,CMPSN:510 OHM,5%,0.25W | 01121 | CB5115 |
| R475[2] | 317-0102-00 | B010100 | B169999 | RES.,FXD,CMPSN:1K OHM,5%,0125W | 01121 | BB1025 |
| R475[2] | 315-0102-00 | B170000 | | RES.,FXD,CMPSN:1K OHM,5%,0.25W | 01121 | CB1025 |

[1] 7B53AN only
[2] 7B53A only

| Ckt No. | Tektronix Part No. | Serial/Model No. Eff | Dscont | Name & Description | Mfr Code | Mfr Part Number |
|---|---|---|---|---|---|---|
| R475[1] | 317-0102-00 | XB020000 | | RES.,FXD,CMPSN:1K OHM,5%,0.125W | 01121 | BB1025 |
| R476 | 315-0271-00 | B170000 | | RES.,FXD,CMPSN:270 OHM,5%,0.25W | 01121 | CB2715 |
| R477 | 315-0271-00 | | | RES.,FXD,CMPSN:270 OHM,5%,0.25W | 01121 | CB2715 |
| R479 | 315-0751-00 | | | RES.,FXD,CMPSN:750 OHM,5%,0.25W | 01121 | CB7515 |
| R483 | 315-0331-00 | | | RES.,FXD,CMPSN:330 OHM,5%,0.25W | 01121 | CB3315 |
| R484 | 315-0511-00 | | | RES.,FXD,CMPSN:510 OHM,5%,0.25W | 01121 | CB5115 |
| R486 | 315-0361-00 | | | RES.,FXD,CMPSN:360 OHM,5%,0.25W | 01121 | CB3615 |
| R487 | 315-0620-00 | | | RES.,FXD,CMPSN:62 OHM,5%,0.25W | 01121 | CB6205 |
| R502 | 315-0512-00 | | | RES.,FXD,CMPSN:5.1K OHM,5%,0.25W | 01121 | CB5125 |
| R504 | 315-0393-00 | | | RES.,FXD,CMPSN:39K OHM,5%,0.25W | 01121 | CB3935 |
| R505 | 315-0622-00 | | | RES.,FXD,CMPSN:6.2K OHM,5%,0.25W | 01121 | CB6225 |
| R508 | 315-0101-00 | | | RES.,FXD,CMPSN:100 OHM,5%,0.25W | 01121 | CB1015 |
| R509 | 315-0151-00 | | | RES.,FXD,CMPSN:150 OHM,5%,0.25W | 01121 | CB1515 |
| R510 | 321-0313-00 | | | RES.,FXD,FILM:17.8K OHM,1%,0.125W | 75042 | CEAT0-1782F |
| R511 | 315-0511-00 | | | RES.,FXD,CMPSN:510 OHM,5%,0.25W | 01121 | CB5115 |
| R513 | 315-0431-00 | | | RES.,FXD,CMPSN:430 OHM,5%,0.25W | 01121 | CB4315 |
| R514 | 315-0182-00 | | | RES.,FXD,CMPSN:1.8K OHM,5%,0.25W | 01121 | CB1825 |
| R516 | 321-0231-00 | | | RES.,FXD,FILM:2.49K OHM,1%,0.125W | 75042 | CEAT0-2491F |
| R517 | 315-0821-00 | | | RES.,FXD,CMPSN:820 OHM,5%,0.25W | 01121 | CB8215 |
| R518 | 315-0102-00 | | | RES.,FXD,CMPSN:1K OHM,5%,0.25W | 01121 | CB1025 |
| R519 | 315-0392-00 | | | RES.,FXD,CMPSN:3.9K OHM,5%,0.25W | 01121 | CB3925 |
| R520 | 315-0472-00 | | | RES.,FXD,CMPSN:4.7K OHM,5%,0.25W | 01121 | CB4725 |
| R521 | 315-0241-00 | | | RES.,FXD,CMPSN:240 OHM,5%,0.25W | 01121 | CB2415 |
| R522 | 315-0102-00 | | | RES.,FXD,CMPSN:1K OHM,5%,0.25W | 01121 | CB1025 |
| R523 | 315-0102-00 | | | RES.,FXD,CMPSN:1K OHM,5%,0.25W | 01121 | CB1025 |
| R526 | 315-0102-00 | | | RES.,FXD,CMPSN:1K OHM,5%,0.25W | 01121 | CB1025 |
| R527 | 315-0102-00 | | | RES.,FXD,CMPSN:1K OHM,5%,0.25W | 01121 | CB1025 |
| R528 | 315-0391-00 | | | RES.,FXD,CMPSN:390 OHM,5%,0.25W | 01121 | CB3915 |
| R529 | 315-0822-00 | | | RES.,FXD,CMPSN:8.2K OHM,5%,0.25W | 01121 | CB8225 |
| R533 | 315-0104-00 | | | RES.,FXD,CMPSN:100K OHM,5%,0.25W | 01121 | CB1045 |
| R535 | 315-0124-00 | | | RES.,FXD,CMPSN:120K OHM,5%,0.25W | 01121 | CB1245 |
| R539 | 315-0102-00 | | | RES.,FXD,CMPSN:1K OHM,5%,0.25W | 01121 | CB1025 |
| R541 | 315-0331-00 | | | RES.,FXD,CMPSN:330 OHM,5%,0.25W | 01121 | CB3315 |
| R542 | 315-0270-00 | | | RES.,FXD,CMPSN:27 OHM,5%,0.25W | 01121 | CB2705 |
| R543 | 315-0620-00 | | | RES.,FXD,CMPSN:62 OHM,5%,0.25W | 01121 | CB6205 |
| R544 | 315-0241-00 | | | RES.,FXD,CMPSN:240 OHM,5%,0.25W | 01121 | CB2415 |
| R545 | 323-0192-00 | | | RES.,FXD,FILM:976 OHM,1%,0.50W | 75042 | CECT0-9760F |
| R547 | 321-0146-00 | | | RES.,FXD,FILM:324 OHM,1%,0.125W | 75042 | CEAT0-3240F |
| R548 | 315-0151-00 | | | RES.,FXD,CMPSN:150 OHM,5%,0.25W | 01121 | CB1515 |
| R549 | 315-0332-00 | | | RES.,FXD,CMPSN:3.3K OHM,5%,0.25W | 01121 | CB3325 |
| R551 | 315-0331-00 | | | RES.,FXD,CMPSN:330 OHM,5%,0.25W | 01121 | CB3315 |
| R553 | 315-0152-00 | | | RES.,FXD,CMPSN:1.5K OHM,5%,0.25W | 01121 | CB1525 |
| R555 | 315-0202-00 | | | RES.,FXD,CMPSN:2K OHM,5%,0.25W | 01121 | CB2025 |
| R556 | 315-0511-00 | B010100 | B099999X | RES.,FXD,CMPSN:510 OHM,5%,0.25W | 01121 | CB5115 |
| R558 | 321-0260-00 | | | RES.,FXD,FILM:4.99K OHM,1%,0.125W | 75042 | CEAT0-4991F |
| R559 | 321-0289-00 | | | RES.,FXD,FILM:10K OHM,1%,0.125W | 75042 | CEAT0-1002F |
| R561 | 315-0103-00 | | | RES.,FXD,CMPSN:10K OHM,5%,0.25W | 01121 | CB1035 |
| R563 | 315-0202-00 | | | RES.,FXD,CMPSN:2K OHM,5%,0.25W | 01121 | CB2025 |
| R564 | 311-1224-00 | | | RES.,VAR,NONWIR:500 OHM,20%,0.50W | 80294 | 3389F-P31-501 |
| R565 | 315-0432-00 | | | RES.,FXD,CMPSN:4.3K OHM,5%,0.25W | 01121 | CB4325 |
| R566 | 315-0153-00 | | | RES.,FXD,CMPSN:15K OHM,5%,0.25W | 01121 | CB1535 |
| R567 | 315-0272-00 | | | RES.,FXD,CMPSN:2.7K OHM,5%,0.25W | 01121 | CB2725 |
| R568 | 315-0471-00 | | | RES.,FXD,CMPSN:470 OHM,5%,0.25W | 01121 | CB4715 |

[1] 7B53AN only.

| Ckt No. | Tektronix Part No. | Serial/Model No. Eff | Dscont | Name & Description | Mfr Code | Mfr Part Number |
|---|---|---|---|---|---|---|
| R569 | 315-0202-00 | | | RES.,FXD,CMPSN:2K OHM,5%,0.25W | 01121 | CB2025 |
| R570 | 321-0201-00 | | | RES.,FXD,FILM:1.21K OHM,1%,0.125W | 75042 | CEAT0-1211F |
| R571 | 315-0103-00 | | | RES.,FXD,CMPSN:10K OHM,5%,0.25W | 01121 | CB1035 |
| R572 | 311-1230-00 | | | RES.,VAR,NONWIR:20K OHM,20%,0.50W | 80294 | 3389F-P31-203 |
| R574 | 315-0622-00 | | | RES.,FXD,CMPSN:6.2K OHM,5%,0.25W | 01121 | CB6225 |
| R575 | 315-0101-00 | | | RES.,FXD,CMPSN:100 OHM,5%,0.25W | 01121 | CB1015 |
| R576 | 311-1230-00 | | | RES.,VAR,NONWIR:20K OHM,20%,0.50W | 80294 | 3389F-P31-203 |
| R578 | 315-0103-00 | | | RES.,FXD,CMPSN:10K OHM,5%,0.25W | 01121 | CB1035 |
| R579 | 315-0304-00 | | | RES.,FXD,CMPSN:300K OHM,5%,0.25W | 01121 | CB3045 |
| R581 | 315-0752-00 | | | RES.,FXD,CMPSN:7.5K OHM,5%,0.25W | 01121 | CB7525 |
| R582 | 315-0752-00 | | | RES.,FXD,CMPSN:7.5K OHM,5%,0.25W | 01121 | CB7525 |
| R583 | 315-0563-00 | | | RES.,FXD,CMPSN:56K OHM,5%,0.25W | 01121 | CB5635 |
| R584 | 315-0202-00 | | | RES.,FXD,CMPSN:2K OHM,5%,0.25W | 01121 | CB2025 |
| R589 | 315-0621-00 | | | RES.,FXD,CMPSN:620 OHM,5%,0.25W | 01121 | CB6215 |
| R590 | 315-0820-00 | | | RES.,FXD,CMPSN:82 OHM,5%,0.25W | 01121 | CB8205 |
| R591 | 315-0433-00 | | | RES.,FXD,CMPSN:43K OHM,5%,0.25W | 01121 | CB4335 |
| R592 | 311-1235-00 | | | RES.,VAR,NONWIR:100K OHM,20%,0.50W | 80294 | 3389F-P31-104 |
| R597 | 315-0153-00 | | | RES.,FXD,CMPSN:15K OHM,5%,0.25W | 01121 | CB1535 |
| R601 | 315-0270-00 | | | RES.,FXD,CMPSN:27 OHM,5%,0.25W | 01121 | CB2705 |
| R603 | 315-0361-00 | | | RES.,FXD,CMPSN:360 OHM,5%,0.25W | 01121 | CB3615 |
| R604 | 322-0210-00 | | | RES.,FXD,FILM:1.5K OHM,1%,0.25W | 75042 | CEBT0-1501F |
| R606 | 315-0301-00 | | | RES.,FXD,CMPSN:300 OHM,5%,0.25W | 01121 | CB3015 |
| R607 | 315-0620-00 | | | RES.,FXD,CMPSN:62 OHM,5%,0.25W | 01121 | CB6205 |
| R608 | 321-0164-00 | | | RES.,FXD,FILM:499 OHM,1%,0.125W | 75042 | CEAT0-4990F |
| R609 | 315-0511-00 | XB080000 | | RES.,FXD,CMPSN:510 OHM,5%,0.25W | 01121 | CB5115 |
| R610 | 315-0270-00 | | | RES.,FXD,CMPSN:27 OHM,5%,0.25W | 01121 | CB2705 |
| R611 | 315-0202-00 | | | RES.,FXD,CMPSN:2K OHM,5%,0.25W | 01121 | CB2025 |
| R612 | 315-0511-00 | | | RES.,FXD,CMPSN:510 OHM,5%,0.25W | 01121 | CB5115 |
| R613 | 315-0102-00 | | | RES.,FXD,CMPSN:1K OHM,5%,0.25W | 01121 | CB1025 |
| R614 | 315-0102-00 | B010100 | B059999 | RES.,FXD,CMPSN:1K OHM,5%,0.25W | 01121 | CB1025 |
| R614 | 321-0148-00 | B060000 | | RES.,FXD,FILM:340 OHM,1%,0.125W | 75042 | CEAT0-3400F |
| R615 | 315-0910-00 | | | RES.,FXD,CMPSN:91 OHM,5%,0.25W | 01121 | CB9105 |
| R616 | 315-0103-00 | | | RES.,FXD,CMPSN:10K OHM,5%,0.25W | 01121 | CB1035 |
| R617 | 315-0683-00 | | | RES.,FXD,CMPSN:68K OHM,5%,0.25W | 01121 | CB6835 |
| R618 | 315-0102-00 | XB080000 | | RES.,FXD,CMPSN:1K OHM,5%,0.25W | 01121 | CB1025 |
| R619 | 315-0623-00 | | | RES.,FXD,CMPSN:62K OHM,5%,0.25W | 01121 | CB6235 |
| R621 | 315-0153-00 | | | RES.,FXD,CMPSN:15K OHM,5%,0.25W | 01121 | CB1535 |
| R622 | 315-0102-00 | | | RES.,FXD,CMPSN:1K OHM,5%,0.25W | 01121 | CB1025 |
| R624 | 315-0243-00 | | | RES.,FXD,CMPSN:24K OHM,5%,0.25W | 01121 | CB2435 |
| R626 | 315-0472-00 | | | RES.,FXD,CMPSN:4.7K OHM,5%,0.25W | 01121 | CB4725 |
| R627 | 315-0682-00 | | | RES.,FXD,CMPSN:6.8K OHM,5%,0.25W | 01121 | CB6825 |
| R628 | 315-0203-00 | | | RES.,FXD,CMPSN:20K OHM,5%,0.25W | 01121 | CB2035 |
| R629 | 315-0103-00 | | | RES.,FXD,CMPSN:10K OHM,5%,0.25W | 01121 | CB1035 |
| R631 | 315-0472-00 | | | RES.,FXD,CMPSN:4.7K OHM,5%,0.25W | 01121 | CB4725 |
| R634 | 315-0122-00 | | | RES.,FXD,CMPSN:1.2K OHM,5%,0.25W | 01121 | CB1225 |
| R635 | 315-0123-00 | | | RES.,FXD,CMPSN:12K OHM,5%,0.25W | 01121 | CB1235 |
| R637 | 315-0102-00 | | | RES.,FXD,CMPSN:1K OHM,5%,0.25W | 01121 | CB1025 |
| R638 | 315-0202-00 | | | RES.,FXD,CMPSN:2K OHM,5%,0.25W | 01121 | CB2025 |
| R639 | 315-0271-00 | | | RES.,FXD,CMPSN:270 OHM,5%,0.25W | 01121 | CB2715 |
| R641 | 315-0202-00 | | | RES.,FXD,CMPSN:2K OHM,5%,0.25W | 01121 | CB2025 |
| R642 | 315-0271-00 | | | RES.,FXD,CMPSN:270 OHM,5%,0.25W | 01121 | CB2715 |
| R644 | 315-0102-00 | | | RES.,FXD,CMPSN:1K OHM,5%,0.25W | 01121 | CB1025 |
| R645 | 315-0202-00 | | | RES.,FXD,CMPSN:2K OHM,5%,0.25W | 01121 | CB2025 |

| Ckt No. | Tektronix Part No. | Serial/Model No. Eff | Dscont | Name & Description | Mfr Code | Mfr Part Number |
|---|---|---|---|---|---|---|
| R647 | 315-0100-00 | | | RES.,FXD,CMPSN:10 OHM,5%,0.25W | 01121 | CB1005 |
| R648 | 315-0241-00 | | | RES.,FXD,CMPSN:240 OHM,5%,0.25W | 01121 | CB2415 |
| R649 | 315-0682-00 | | | RES.,FXD,CMPSN:6.8K OHM,5%,0.25W | 01121 | CB6825 |
| R651 | 315-0752-00 | | | RES.,FXD,CMPSN:7.5K OHM,5%,0.25W | 01121 | CB7525 |
| R652 | 311-1225-00 | | | RES.,VAR,NONWIR:1K OHM,20%,0.50W | 80294 | 3389F-P31-102 |
| R653 | 315-0752-00 | | | RES.,FXD,CMPSN:7.5K OHM,5%,0.25W | 01121 | CB7525 |
| R655 | 315-0201-00 | XB080000 | | RES.,FXD,CMPSN:200 OHM,5%,0.25W | 01121 | CB2015 |
| R657 | 315-0102-00 | | | RES.,FXD,CMPSN:1K OHM,5%,0.25W | 01121 | CB1025 |
| R658 | 315-0302-00 | | | RES.,FXD,CMPSN:3K OHM,5%,0.25W | 01121 | CB3025 |
| R659 | 315-0471-00 | | | RES.,FXD,CMPSN:470 OHM,5%,0.25W | 01121 | CB4715 |
| R660 | 315-0362-00 | | | RES.,FXD,CMPSN:3.6K OHM,5%,0.25W | 01121 | CB3625 |
| R661 | 315-0302-00 | | | RES.,FXD,CMPSN:3K OHM,5%,0.25W | 01121 | CB3025 |
| R662 | 315-0202-00 | | | RES.,FXD,CMPSN:2K OHM,5%,0.25W | 01121 | CB2025 |
| R663 | 315-0362-00 | | | RES.,FXD,CMPSN:3.6K OHM,5%,0.25W | 01121 | CB3625 |
| R665 | 315-0431-00 | B010100 | B079999 | RES.,FXD,CMPSN:430 OHM,5%,0.25W | 01121 | CB4315 |
| R665 | 315-0271-00 | B080000 | | RES.,FXD,CMPSN:270 OHM,5%,0.25W | 01121 | CB2715 |
| R666 | 315-0511-00 | | | RES.,FXD,CMPSN:510 OHM,5%,0.25W | 01121 | CB5115 |
| R668 | 315-0752-00 | | | RES.,FXD,CMPSN:7.5K OHM,5%,0.25W | 01121 | CB7525 |
| R669 | 315-0162-00 | | | RES.,FXD,CMPSN:1.6K OHM,5%,0.25W | 01121 | CB1625 |
| R670 | 315-0471-00 | | | RES.,FXD,CMPSN:470 OHM,5%,0.25W | 01121 | CB4715 |
| R672 | 315-0511-00 | | | RES.,FXD,CMPSN:510 OHM,5%,0.25W | 01121 | CB5115 |
| R673 | 315-0102-00 | | | RES.,FXD,CMPSN:1K OHM,5%,0.25W | 01121 | CB1025 |
| R675 | 311-1235-00 | | | RES.,VAR,NONWIR:100K OHM,20%,0.50W | 80294 | 3389F-P31-104 |
| R676 | 315-0433-00 | | | RES.,FXD,CMPSN:43K OHM,5%,0.25W | 01121 | CB4335 |
| R677 | 315-0820-00 | | | RES.,FXD,CMPSN:82 OHM,5%,0.25W | 01121 | CB8205 |
| R679 | 315-0621-00 | | | RES.,FXD,CMPSN:620 OHM,5%,0.25W | 01121 | CB6215 |
| R680 | 315-0103-00 | | | RES.,FXD,CMPSN:10K OHM,5%,0.25W | 01121 | CB1035 |
| R681 | 315-0623-00 | | | RES.,FXD,CMPSN:62K OHM,5%,0.25W | 01121 | CB6235 |
| R682 | 315-0303-00 | | | RES.,FXD,CMPSN:30K OHM,5%,0.25W | 01121 | CB3035 |
| R683 | 315-0102-00 | | | RES.,FXD,CMPSN:1K OHM,5%,0.25W | 01121 | CB1025 |
| R684 | 321-0192-00 | | | RES.,FXD,FILM:976 OHM,1%,0.125W | 75042 | CEAT0-9760F |
| R685 | 315-0510-00 | | | RES.,FXD,CMPSN:51 OHM,5%,0.25W | 01121 | CB5105 |
| R686 | 301-0133-00 | | | RES.,FXD,CMPSN:13K OHM,5%,0.50W | 01121 | EB1335 |
| R687 | 315-0510-00 | | | RES.,FXD,CMPSN:51 OHM,5%,0.25W | 01121 | CB5105 |
| R689 | 315-0102-00 | | | RES.,FXD,CMPSN:1K OHM,5%,0.25W | 01121 | CB1025 |
| R690 | 315-0752-00 | | | RES.,FXD,CMPSN:7.5K OHM,5%,0.25W | 01121 | CB7525 |
| R691 | 321-0260-00 | | | RES.,FXD,FILM:4.99K OHM,1%,0.125W | 75042 | CEAT0-4991F |
| R692 | 321-0268-00 | | | RES.,FXD,FILM:6.04K OHM,1%,0.125W | 75042 | CEAT0-6041F |
| R693 | 321-0268-00 | | | RES.,FXD,FILM:6.04K OHM,1%,0.125W | 75042 | CEAT0-6041F |
| R694 | 321-0260-00 | | | RES.,FXD,FILM:4.99K OHM,1%,0.125W | 75042 | CEAT0-4991F |
| R695 | 315-0391-00 | | | RES.,FXD,CMPSN:390 OHM,5%,0.25W | 01121 | CB3915 |
| R696 | 315-0242-00 | | | RES.,FXD,CMPSN:2.4K OHM,5%,0.25W | 01121 | CB2425 |
| R697 | 315-0391-00 | | | RES.,FXD,CMPSN:390 OHM,5%,0.25W | 01121 | CB3915 |
| R698 | 315-0102-00 | | | RES.,FXD,CMPSN:1K OHM,5%,0.25W | 01121 | CB1025 |
| R701 | 321-0222-07 | | | RES.,FXD,FILM:2K OHM,0.1%,0.125W | 75042 | CEAT9-2001D |
| R704 | 321-0222-07 | | | RES.,FXD,FILM:2K OHM,0.1%,0.125W | 75042 | CEAT9-2001D |
| R706 | 315-0103-00 | | | RES.,FXD,CMPSN:10K OHM,5%,0.25W | 01121 | CB1035 |
| R707 | 315-0104-00 | | | RES.,FXD,CMPSN:100K OHM,5%,0.25W | 01121 | CB1045 |
| R710 | 321-0327-00 | | | RES.,FXD,FILM:24.9K OHM,1%,0.125W | 75042 | CEAT0-2492F |
| R711 | 315-0104-00 | | | RES.,FXD,CMPSN:100K OHM,5%,0.25W | 01121 | CB1045 |
| R713 | 321-0452-00 | | | RES.,FXD,FILM:499K OHM,1%,0.125W | 75042 | CEAT0-4993F |
| R714 | 321-0356-00 | | | RES.,FXD,FILM:49.9K OHM,1%,0.125W | 75042 | CEAT0-4992F |
| R716 | 321-0356-00 | | | RES.,FXD,FILM:49.9K OHM,1%,0.125W | 75042 | CEAT0-4992F |

| Ckt No. | Tektronix Part No. | Serial/Model No. Eff | Dscont | Name & Description | Mfr Code | Mfr Part Number |
|---|---|---|---|---|---|---|
| R717 | 321-0268-00 | | | RES.,FXD,FILM:6.04K OHM,1%,0.125W | 75042 | CEAT0-6041F |
| R720 | 321-0174-00 | | | RES.,FXD,FILM:634 OHM,1%,0.125W | 75042 | CEAT0-6340F |
| R722 | 315-0103-00 | | | RES.,FXD,CMPSN:10K OHM,5%,0.25W | 01121 | CB1035 |
| R723 | 315-0104-00 | | | RES.,FXD,CMPSN:100K OHM,5%,0.25W | 01121 | CB1045 |
| R725 | 321-0327-00 | | | RES.,FXD,FILM:24.9K OHM,1%,0.125W | 75042 | CEAT0-2492F |
| R726 | 315-0104-00 | | | RES.,FXD,CMPSN:100K OHM,5%,0.25W | 01121 | CB1045 |
| R728 | 315-0103-00 | | | RES.,FXD,CMPSN:10K OHM,5%,0.25W | 01121 | CB1035 |
| R729 | 315-0104-00 | | | RES.,FXD,CMPSN:100K OHM,5%,0.25W | 01121 | CB1045 |
| R731 | 315-0273-00 | | | RES.,FXD,CMPSN:27K OHM,5%,0.25W | 01121 | CB2735 |
| R732 | 315-0104-00 | | | RES.,FXD,CMPSN:100K OHM,5%,0.25W | 01121 | CB1045 |
| R734 | 315-0511-00 | | | RES.,FXD,CMPSN:510 OHM,5%,0.25W | 01121 | CB5115 |
| R736 | 315-0103-00 | | | RES.,FXD,CMPSN:10K OHM,5%,0.25W | 01121 | CB1035 |
| R738 | 321-0225-00 | | | RES.,FXD,FILM:2.15K OHM,1%,0.125W | 75042 | CEAT0-2151F |
| R739 | 321-0132-00 | | | RES.,FXD,FILM:232 OHM,1%,0.125W | 75042 | CEAT0-2320F |
| R741 | 321-0260-00 | | | RES.,FXD,FILM:4.99K OHM,1%,0.125W | 75042 | CEAT0-4991F |
| R745 | 315-0621-00 | | | RES.,FXD,CMPSN:620 OHM,5%,0.25W | 01121 | CB6215 |
| R747 | 321-0207-00 | | | RES.,FXD,FILM:1.4K OHM,1%,0.125W | 75042 | CEAT0-1401F |
| R748 | 321-0186-00 | | | RES.,FXD,FILM:845 OHM,1%,0.125W | 75042 | CEAT0-8450F |
| R750 | 321-0220-00 | | | RES.,FXD,FILM:1.91K OHM,1%,0.125W | 75042 | CEAT0-1911F |
| R751 | 321-0236-00 | | | RES.,FXD,FILM:2.8K OHM,1%,0.125W | 75042 | CEAT0-2801F |
| R753 | 315-0912-00 | | | RES.,FXD,CMPSN:9.1K OHM,5%,0.25W | 01121 | CB9125 |
| R757 | 321-0164-00 | | | RES.,FXD,FILM:499 OHM,1%,0.125W | 75042 | CEAT0-4990F |
| R759 | 321-0148-00 | | | RES.,FXD,FILM:340 OHM,1%,0.125W | 75042 | CEAT0-3400F |
| R761 | 321-0057-00 | | | RES.,FXD,FILM:38.3 OHM,1%,0.125W | 75042 | CEAT0-38R30F |
| R762 | 311-1221-00 | | | RES.,VAR,NONWIR:50 OHM,20%,0.50W | 80294 | 3389F-P31-500 |
| R764 | 308-0300-00 | | | RES.,FXD,WW:1.75K OHM,1%,3W | 91637 | RS2B17151F |
| R766 | 321-0148-00 | | | RES.,FXD,FILM:340 OHM,1%,0.125W | 75042 | CEAT0-3400F |
| R768 | 321-0222-07 | | | RES.,FXD,FILM:2K OHM,0.1%,0.125W | 75042 | CEAT9-2001D |
| R770 | 315-0432-00 | | | RES.,FXD,CMPSN:4.3K OHM,5%,0.25W | 01121 | CB4325 |
| R772 | 315-0302-00 | | | RES.,FXD,CMPSN:3K OHM,5%,0.25W | 01121 | CB3025 |
| R774 | 321-0153-00 | | | RES.,FXD,FILM:383 OHM,1%,0.125W | 75042 | CEAT0-3830F |
| R901 [1] | 315-0753-00 | | | RES.,FXD,CMPSN:75K OHM,5%,0.25W | 01121 | CB7535 |
| R903 [1] | 315-0154-00 | | | RES.,FXD,CMPSN:150K OHM,5%,0.25W | 01121 | CB1545 |
| R905 [1] | 321-0344-00 | | | RES.,FXD,FILM:37.4K OHM,1%,0.125W | 75042 | CEAT0-3742F |
| R907 [1] | 315-0154-00 | | | RES.,FXD,CMPSN:150K OHM,5%,0.25W | 01121 | CB1545 |
| R909 [1] | 315-0154-00 | | | RES.,FXD,CMPSN:150K OHM,5%,0.25W | 01121 | CB1545 |
| R911 [1] | 315-0753-00 | | | RES.,FXD,CMPSN:75K OHM,5%,0.25W | 01121 | CB7535 |
| R913 [1] | 315-0753-00 | | | RES.,FXD,CMPSN:75K OHM,5%,0.25W | 01121 | CB7535 |
| R915 [1] | 315-0154-00 | | | RES.,FXD,CMPSN:150K OHM,5%,0.25W | 01121 | CB1545 |
| R917 [1] | 321-0344-00 | | | RES.,FXD,FILM:37.4K OHM,1%,0.125W | 75042 | CEAT0-3742F |
| R919 [1] | 315-0154-00 | | | RES.,FXD,CMPSN:150K OHM,5%,0.25W | 01121 | CB1545 |
| R921 [1] | 315-0753-00 | | | RES.,FXD,CMPSN:75K OHM,5%,0.25W | 01121 | CB7535 |
| R923 [1] | 315-0154-00 | | | RES.,FXD,CMPSN:150K OHM,5%,0.25W | 01121 | CB1545 |
| R925 [1] | 321-0344-00 | | | RES.,FXD,FILM:37.4K OHM,1%,0.125W | 75042 | CEAT0-3742F |
| R926 [1] | 321-0344-00 | | | RES.,FXD,FILM:37.4K OHM,1%,0.125W | 75042 | CEAT0-3742F |
| R927 [1] | 315-0151-00 | XB150000 | | RES.,FXD,CMPSN:150 OHM,5%,0.25W | 01121 | CB1515 |
| R928 [1] | 315-0513-00 | | | RES.,FXD,CMPSN:51K OHM,5%,0.25W | 01121 | CB5135 |
| R929 [1] | 315-0513-00 | | | RES.,FXD,CMPSN:51K OHM,5%,0.25W | 01121 | CB5135 |
| R931 [1] | 315-0154-00 | | | RES.,FXD,CMPSN:150K OHM,5%,0.25W | 01121 | CB1545 |
| R932 [1] | 315-0154-00 | | | RES.,FXD,CMPSN:150K OHM,5%,0.25W | 01121 | CB1545 |
| R934 [1] | 315-0753-00 | | | RES.,FXD,CMPSN:75K OHM,5%,0.25W | 01121 | CB7535 |
| R935 [1] | 315-0753-00 | | | RES.,FXD,CMPSN:75K OHM,5%,0.25W | 01121 | CB7535 |
| R937 [1] | 315-0154-00 | | | RES.,FXD,CMPSN:150K OHM,5%,0.25W | 01121 | CB1545 |
| R938 [1] | 315-0154-00 | | | RES.,FXD,CMPSN:150K OHM,5%,0.25W | 01121 | CB1545 |

[1] 7B53A only.

| Ckt No. | Tektronix Part No. | Serial/Model No. Eff | Dscont | Name & Description | Mfr Code | Mfr Part Number |
|---|---|---|---|---|---|---|
| R940[1] | 315-0753-00 | | | RES.,FXD,CMPSN:75K OHM,5%,0.25W | 01121 | CB7535 |
| R941[1] | 315-0753-00 | | | RES.,FXD,CMPSN:75K OHM,5%,0.25W | 01121 | CB7535 |
| R943[1] | 315-0154-00 | | | RES.,FXD,CMPSN:150K OHM,5%,0.25W | 01121 | CB1545 |
| R944[1] | 315-0154-00 | | | RES.,FXD,CMPSN:150K OHM,5%,0.25W | 01121 | CB1545 |
| S4[2] | | | | | | |
| S5[3] | | | | | | |
| S10[4] | 670-1869-00 | | | PUSHBUTTON:SOURCE | 80009 | 670-1869-00 |
| S20[4] | 670-1868-00 | | | PUSHBUTTON:COUPLING | 80009 | 670-1868-00 |
| R30[4] | 670-1867-00 | | | PUSHBUTTON:MODE | 80009 | 670-1867-00 |
| S40 | | | | | | |
| S41[4] | 260-1133-00 | | | SWITCH,PUSH:3 BUTTON,DOUBLE POLE | 80009 | 260-1133-00 |
| S42 | | | | | | |
| S100A,B[4] | | | | CAM SW ASSY:TIME/DIV,DLY TIME/DIV | | |
| S144[5,6] | | | | | | |
| S144A,B[1,5] | | | | | | |
| S251 | 260-0960-01 | | | SWITCH,SLIDE:0.5A,120VDC,CKT BD MT | 10389 | 23-021-043 |
| S252 | 260-1309-00 | | | SWITCH,PUSH:4PDT: | 01963 | E63-10H |
| S262 | 260-0960-01 | | | SWITCH,SLIDE:0.5A,120VDC,CKT BD MT | 10389 | 23-021-043 |
| S762 | 260-1208-00 | | | SWITCH,PUSH:DPDT | 71590 | 2KAB010000-359 |
| U350 | 156-0205-00 | | | MICROCIRCUIT,DI:QUAD 2-INPUT NOR GATE | 04713 | MC10102L |
| U355 | 156-0205-00 | | | MICROCIRCUIT,DI:QUAD 2-INPUT NOR GATE | 04713 | MC10102L |
| U375[1] | 156-0204-01 | | | MICROCIRCUIT,DI:DUAL 275 MHZ,CLOCKED-LATCH | 80009 | 156-0204-01 |
| U375[6] | 156-0204-00 | B010100 | B019999 | MICROCIRCUIT,DI:DUAL 275 MHZ,CLOCKED-LATCH | 04713 | MC1669L |
| U375[6] | 156-0204-01 | B020000 | | MICROCIRCUIT,DI:DUAL 275 MHZ,CLOCKED-LATCH | 80009 | 156-0204-01 |
| U450 | 156-0205-00 | | | MICROCIRCUIT,DI:QUAD 2-INPUT NOR GATE | 04713 | MC10102L |
| U455 | 156-0205-00 | | | MICROCIRCUIT,DI:QUAD 2-INPUT NOR GATE | 04713 | MC10102L |
| U475 | 156-0204-00 | | | MICROCIRCUIT,DI:DUAL 275 MHZ,CLOCKED-LATCH | 04713 | MC1669L |
| U520 | 155-0049-01 | | | MICROCIRCUIT,DI:MONOLITHIC,SWEEP CONTROL | 80009 | 155-0049-01 |
| U580 | 155-0042-03 | | | MICROCIRCUIT,LI:MILLER INT,DELAY PICKOFF | 80009 | 155-0042-03 |
| U650 | 155-0042-03 | | | MICROCIRCUIT,LI:MILLER INT,DELAY PICKOFF | 80009 | 155-0042-03 |
| U720 | 156-0048-00 | | | MICROCIRCUIT,LI:FIVE NPN TRANSISTOR | 86684 | CA3046 |
| U744 | 156-0048-00 | | | MICROCIRCUIT,LI:FIVE NPN TRANSISTOR | 86684 | CA3046 |
| VR320 | 152-0149-00 | | | SEMICOND DEVICE:ZENER,0.4W,10V,5% | 04713 | 1N961B |
| VR420 | 152-0149-00 | | | SEMICOND DEVICE:ZENER,0.4W,10V,5% | 04713 | 1N961B |
| VR570 | 152-0461-00 | | | SEMICOND DEVICE:ZENER,0.4W,6.2V,5% | 04713 | 1N821 |
| VR708 | 152-0227-00 | | | SEMICOND DEVICE:ZENER,0.4W,6.2V,5% | 81483 | 69-6585 |

[1] 7B53A only.
[2] Furnished as a unit with R4.
[3] Furnished as a unit with R5.
[4] See Mechanical Parts List for replacement parts.
[5] Furnished as a unit with R144.
[6] 7B53AN only.

# DIAGRAMS AND CIRCUIT BOARD ILLUSTRATIONS

## Symbols and Reference Designators

Electrical components shown on the diagrams are in the following units unless noted otherwise:

Capacitors = Values one or greater are in picofarads (pF). Values less than one are in microfarads (μF).
Resistors = Ohms (Ω)

Symbols used on the diagrams are based on USA Standard Y32.2-1967.

Logic symbology is based on MIL-STD-806B in terms of positive logic. Logic symbols depict the logic function performed and may differ from the manufacturer's data.

The following special symbols are used on the diagrams:

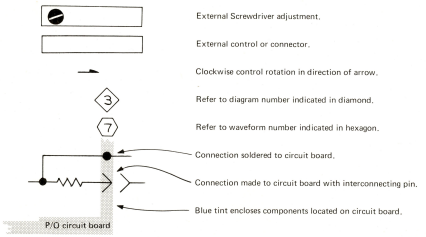


External Screwdriver adjustment.

External control or connector.

Clockwise control rotation in direction of arrow.

Refer to diagram number indicated in diamond.

Refer to waveform number indicated in hexagon.

Connection soldered to circuit board.

Connection made to circuit board with interconnecting pin.

Blue tint encloses components located on circuit board.

The following prefix letters are used as reference designators to identify components or assemblies on the diagrams.

| | |
|---|---|
| A | Assembly, separable or repairable (circuit board, etc.) |
| AT | Attenuator, fixed or variable |
| B | Motor |
| BT | Battery |
| C | Capacitor, fixed or variable |
| CR | Diode, signal or rectifier |
| DL | Delay line |
| DS | Indicating device (lamp) |
| F | Fuse |
| FL | Filter |
| H | Heat dissipating device (heat sink, heat radiator, etc.) |
| HR | Heater |
| J | Connector, stationary portion |
| K | Relay |
| L | Inductor, fixed or variable |
| LR | Inductor/resistor combination |
| M | Meter |
| Q | Transistor or silicon-controlled rectifier |
| P | Connector, movable portion |
| R | Resistor, fixed or variable |
| RT | Thermistor |
| S | Switch |
| T | Transformer |
| TP | Test point |
| U | Assembly, inseparable or non-repairable (integrated circuit, etc.) |
| V | Electron tube |
| VR | Voltage regulator (zener diode, etc.) |
| Y | Crystal |





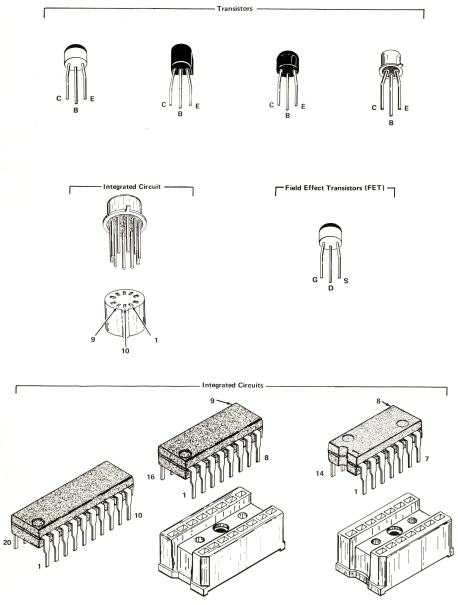


Fig. 6-1. Electrode configuration for semiconductors in this instrument.





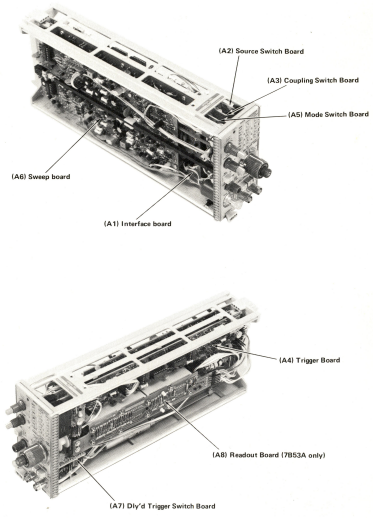


Fig. 6-2. Location of circuit boards in the 7B53A/7B53AN.

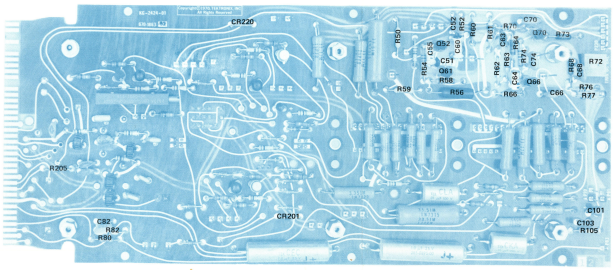


Fig. 6-3A. P/O A1. Partial Interface circuit board, SN8090000 and up.



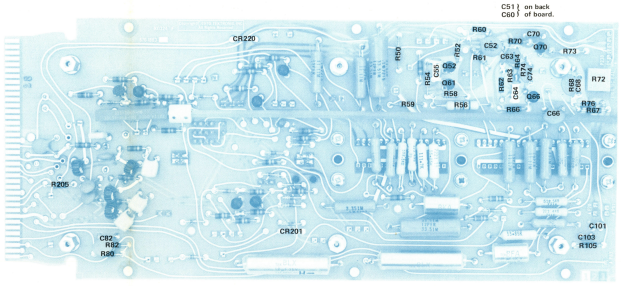


Fig. 6-3B. P/O A1. Partial Interface circuit board, below SN8090000.

Fig. 6-4. A2. Source Switch circuit board.

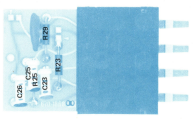

Fig. 6-5. A3. Coupling Switch circuit board.

## VOLTAGES AND WAVEFORMS

The voltages and waveforms shown on this diagram were obtained by using the recommended test equipment and test set-ups listed below.

### RECOMMENDED TEST EQUIPMENT

| ITEM | SPECIFICATIONS | RECOMMENDED TYPE |
|---|---|---|
| Oscilloscope | Frequency response DC to 65 MHz<br>Deflection factor 5 mV to 5 V/Div<br>Input impedance 10 MΩ, 20 pF<br>Sweep rate 500 ns | Tektronix 7603 or 7613 equipped with 7A15A Amplifier and 7850 Time-Base Unit, or equivalent. |
| Probe | Fast rise 10X attenuation probe compatible with the vertical amplifier of the test oscilloscope. | Tektronix P6053A, or equivalent. |
| Voltmeter (Non-loading digital multimeter) | Input impedance 10 MΩ<br>Range 0 – 500 V | Tektronix 7D13 Digital Multimeter (test oscilloscope must have readout system) or Fairchild Model 7050, or equivalent. |
| Extender | Required for extending the 7B53AN from the mainframe when making waveform and voltage measurements. | Tektronix extender plug-in, Tektronix Part Number 067-0589-00 or Tektronix flexible extender, Tektronix Part Number 067-0616-00, or equivalent. |

### Voltage Conditions

The 7B53AN Unit under test must be connected to a mainframe separate from the test oscilloscope. No signal is applied for voltage measurements. Voltmeter common is connected to chassis ground.

### 7B53AN Control Settings

| | |
|---|---|
| MAIN TRIGGERING | |
| MODE | AUTO |
| COUPLING | AC |
| SOURCE | INT |
| SLOPE | (+) |
| LEVEL | Control center |
| TIME/DIV OR DLY TIME | 1 ms |
| DLY'D Time/Division | 0.5 ms (press in for DLY'D display mode) |
| VARIABLE | CAL (pull out for MIXED display mode) |
| DELAY TIME MULT | 5.00 |
| MAG | X1 |
| POSITION | Center display horizontally |
| DLY'D TRIG | |
| LEVEL | Control center |
| SLOPE | (+) |
| COUPLING | AC |
| SOURCE | INT |

### Waveform Conditions

Front panel controls are set the same as for voltage measurements. The test oscilloscope 0.4 Volt calibration signal is applied to the vertical amplifier of the mainframe to which the 7B53AN is connected. The vertical amplifier of the system under test is set for 100 mV/Division. The test oscilloscope is triggered from the calibration signal; vertical input is AC coupled.

Tolerances of voltages and waveforms shown are ±20%.

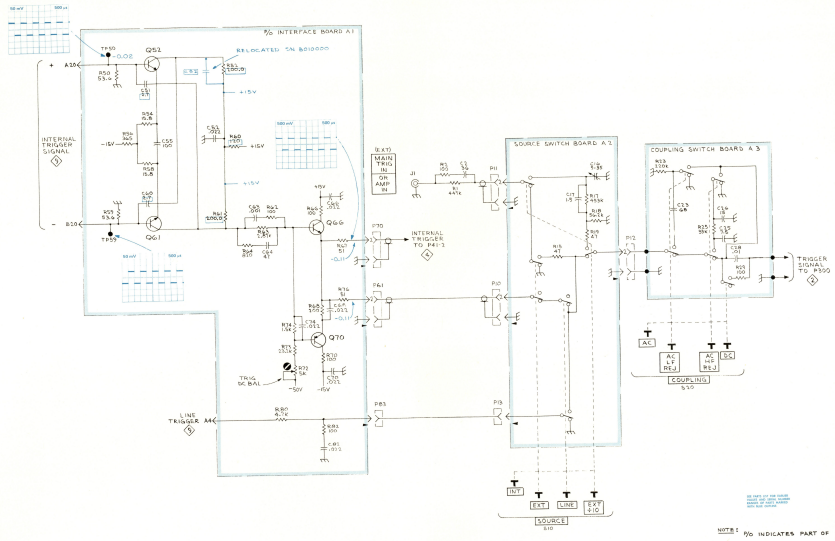


NOTE: P/O INDICATES PART OF



MAIN TRIGGER PREAMP 1

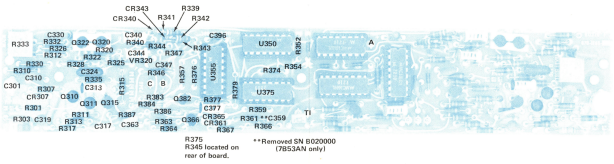


Fig. 6-6. P/O A4. Partial Trigger circuit board.

## VOLTAGES AND WAVEFORMS

The voltages and waveforms shown on this diagram were obtained by using the recommended test equipment and test set-ups listed below.

### RECOMMENDED TEST EQUIPMENT

| ITEM | SPECIFICATIONS | RECOMMENDED TYPE |
|---|---|---|
| Oscilloscope | Frequency response DC to 65 MHz<br>Deflection factor 5 mV to 5 V/Div<br>Input impedance 10 MΩ, 20 pF<br>Sweep rate 500 ns | Tektronix 7603 or 7613 equipped with 7A15A Amplifier and 7B50 Time-Base Unit, or equivalent. |
| Probe | Fast rise 10X attenuation probe compatible with the vertical amplifier of the test oscilloscope. | Tektronix P6053A, or equivalent. |
| Voltmeter (Non-loading digital multimeter) | Input impedance 10 MΩ<br>Range 0 – 500 V | Tektronix 7D13 Digital Multimeter (test oscilloscope must have readout system) or Fairchild Model 7050, or equivalent. |
| Extender | Required for extending the 7B53AN from the mainframe when making waveform and voltage measurements. | Tektronix extender plug-in, Tektronix Part Number 067-0589-00 or Tektronix flexible extender, Tektronix Part Number 067-0616-00, or equivalent. |

### Voltage Conditions

The 7B53AN Unit under test must be connected to a mainframe separate from the test oscilloscope. No signal is applied for voltage measurements. Voltmeter common is connected to chassis ground.

### 7B53AN Control Settings

| | |
|---|---|
| MAIN TRIGGERING | |
| MODE | AUTO |
| COUPLING | AC |
| SOURCE | INT |
| SLOPE | (+) |
| LEVEL | Control center |
| TIME/DIV OR DLY TIME | 1 ms |
| DLY'D Time/Division | 0.5 ms (press in for DLY'D display mode) |
| VARIABLE | CAL (pull out for MIXED display mode) |
| DELAY TIME MULT | 5.00 |
| MAG | X1 |
| POSITION | Center display horizontally |
| DLY'D TRIG | |
| LEVEL | Control center |
| SLOPE | (+) |
| COUPLING | AC |
| SOURCE | INT |

### Waveform Conditions

Front panel controls are set the same as for voltage measurements. The test oscilloscope 0.4 Volt calibration signal is applied to the vertical amplifier of the mainframe to which the 7B53AN is connected. The vertical amplifier of the system under test is set for 100 mV/Division. The test oscilloscope is triggered from the calibration signal; vertical input is AC coupled.

Tolerances of voltages and waveforms shown are ±20%.

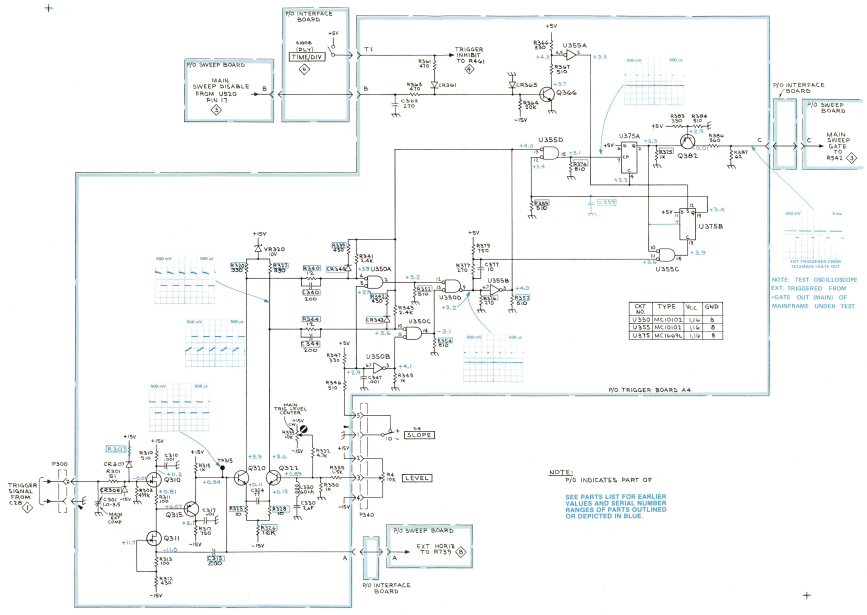


7B53A/7B53AN REV. F, JUN. 1976 MAIN TRIGGER GENERATOR 2 ms 673

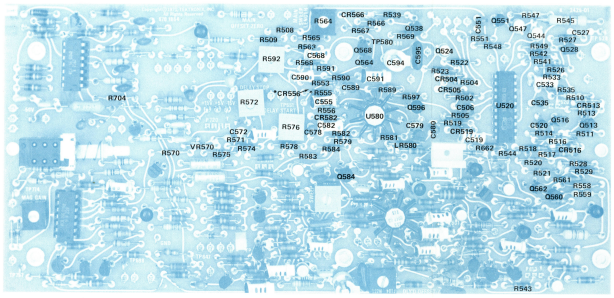


*See Parts List for serial number ranges.

Fig. 6-8A. P/O A6. Partial Sweep circuit board, SN B090000 and up.

REV. JAN 1974 Ⓐ

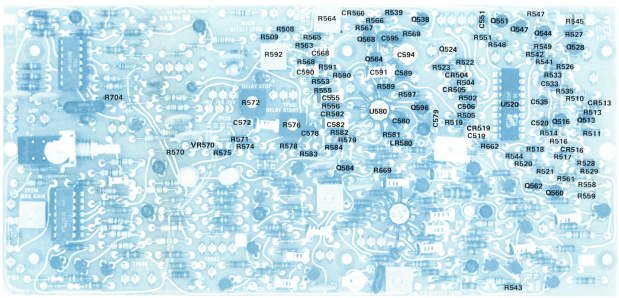


NOTE:
See Fig. 6-3 for location of components not identified here.

Fig. 6-8B. P/O A6. Partial Sweep circuit board, below SN B090000.

C527 added to back SN B030000

REV. JAN 1974 Ⓑ

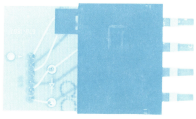


Fig. 6-7. A5. Mode Switch circuit board.

Ⓑ

## VOLTAGES AND WAVEFORMS

The voltages and waveforms shown on this diagram were obtained by using the recommended test equipment and test set-ups listed below.

### RECOMMENDED TEST EQUIPMENT

| ITEM | SPECIFICATIONS | RECOMMENDED TYPE |
|---|---|---|
| Oscilloscope | Frequency response DC to 65 MHz<br>Deflection factor 5 mV to 5 V/Div<br>Input impedance 10 MΩ, 20 pF<br>Sweep rate 500 ns | Tektronix 7603 or 7613 equipped with 7A15A Amplifier and 7B50 Time-Base Unit, or equivalent. |
| Probe | Fast rise 10X attenuation probe compatible with the vertical amplifier of the test oscilloscope. | Tektronix P6053A, or equivalent. |
| Voltmeter (Non-loading digital multimeter) | Input impedance 10 MΩ<br>Range 0 – 500 V | Tektronix 7D13 Digital Multimeter (test oscilloscope must have readout system) or Fairchild Model 7050, or equivalent. |
| Extender | Required for extending the 7B53AN from the mainframe when making waveform and voltage measurements. | Tektronix extender plug-in. Tektronix Part Number 067-0589-00 or Tektronix flexible extender, Tektronix Part Number 067-0616-00, or equivalent. |

### Voltage Conditions

The 7B53AN Unit under test must be connected to a mainframe separate from the test oscilloscope. No signal is applied for voltage measurements. Voltmeter common is connected to chassis ground.

### 7B53AN Control Settings

| | |
|---|---|
| MAIN TRIGGERING | |
| MODE | AUTO |
| COUPLING | AC |
| SOURCE | INT |
| SLOPE | (+) |
| LEVEL | Control center |
| TIME/DIV OR DLY TIME | 1 ms |
| DLY'D Time/Division | 0.5 ms (press in for DLY'D display mode) |
| VARIABLE | CAL (pull out for MIXED display mode) |
| DELAY TIME MULT | 5.00 |
| MAG | X1 |
| POSITION | Center display horizontally |
| DLY'D TRIG | |
| LEVEL | Control center |
| SLOPE | (+) |
| COUPLING | AC |
| SOURCE | INT |

### Waveform Conditions

Front panel controls are set the same as for voltage measurements. The test oscilloscope 0.4 Volt calibration signal is applied to the vertical amplifier of the mainframe to which the 7B53AN is connected. The vertical amplifier of the system under test is set for 100 mV/Division. The test oscilloscope is triggered from the +GATE OUT (MAIN) of the mainframe under test; vertical input is AC coupled.

Tolerances of voltages and waveforms shown are ±20%.

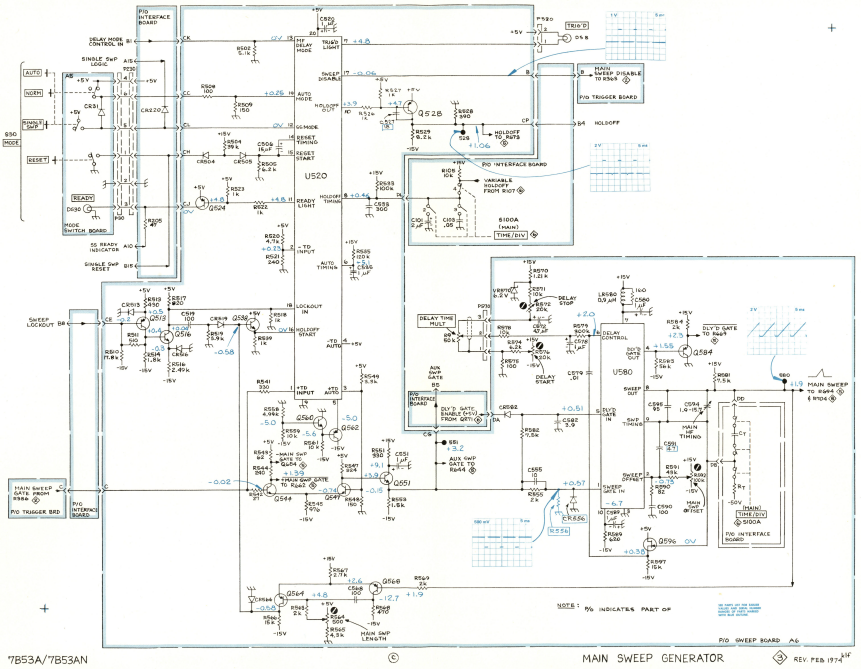

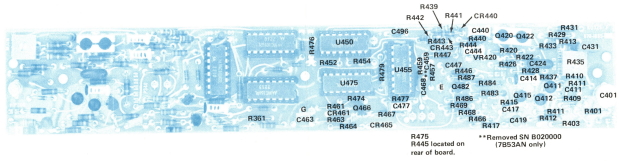


Fig. 6-10. P/O A4. Partial Trigger circuit board.

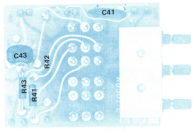


Fig. 6-9. A7. Delayed Trigger Switch circuit board.

## VOLTAGES AND WAVEFORMS

The voltages and waveforms shown on this diagram were obtained by using the recommended test equipment and test set-ups listed below.

**RECOMMENDED TEST EQUIPMENT**

| ITEM | SPECIFICATIONS | | RECOMMENDED TYPE |
|---|---|---|---|
| Oscilloscope | Frequency response<br>Deflection factor<br>Input impedance<br>Sweep rate | DC to 65 MHz<br>5 mV to 5 V/Div<br>10 MΩ, 20 pF<br>500 ns | Tektronix 7603 or 7613 equipped with 7A15A Amplifier and 7B50 Time-Base Unit, or equivalent. |
| Probe | Fast rise 10X attenuation probe compatible with the vertical amplifier of the test oscilloscope. | | Tektronix P6053A, or equivalent. |
| Voltmeter (Non-loading digital multimeter) | Input impedance<br>Range | 10 MΩ<br>0 – 500 V | Tektronix 7D13 Digital Multimeter (test oscilloscope must have readout system) or Fairchild Model 7050, or equivalent. |
| Extender | Required for extending the 7B53AN from the mainframe when making waveform and voltage measurements. | | Tektronix extender plug-in. Tektronix Part Number 067-0589-00 or Tektronix flexible extender, Tektronix Part Number 067-0616-00, or equivalent. |

### Voltage Conditions

The 7B53AN Unit under test must be connected to a mainframe separate from the test oscilloscope. No signal is applied for voltage measurements. Voltmeter common is connected to chassis ground.

### 7B53AN Control Settings

| | |
|---|---|
| MAIN TRIGGERING | |
| MODE | AUTO |
| COUPLING | AC |
| SOURCE | INT |
| SLOPE | (+) |
| LEVEL | Control center |
| TIME/DIV OR DLY TIME | 1 ms |
| DLY'D Time/Division | 0.5 ms (press in for DLY'D display mode) |
| VARIABLE | CAL (pull out for MIXED display mode) |
| DELAY TIME MULT | 5.00 |
| MAG | X1 |
| POSITION | Center display horizontally |
| DLY'D TRIG | |
| LEVEL | Control center |
| SLOPE | (+) |
| COUPLING | AC |
| SOURCE | INT |

### Waveform Conditions

Front panel controls are set the same as for voltage measurements. The test oscilloscope 0.4 Volt calibration signal is applied to the vertical amplifier of the mainframe to which the 7B53AN is connected. The vertical amplifier of the system under test is set for 100 mV/Division. The test oscilloscope is triggered from the +GATE OUT (MAIN) of the mainframe under test; vertical input is AC coupled.

Tolerances of voltages and waveforms shown are ±20%.

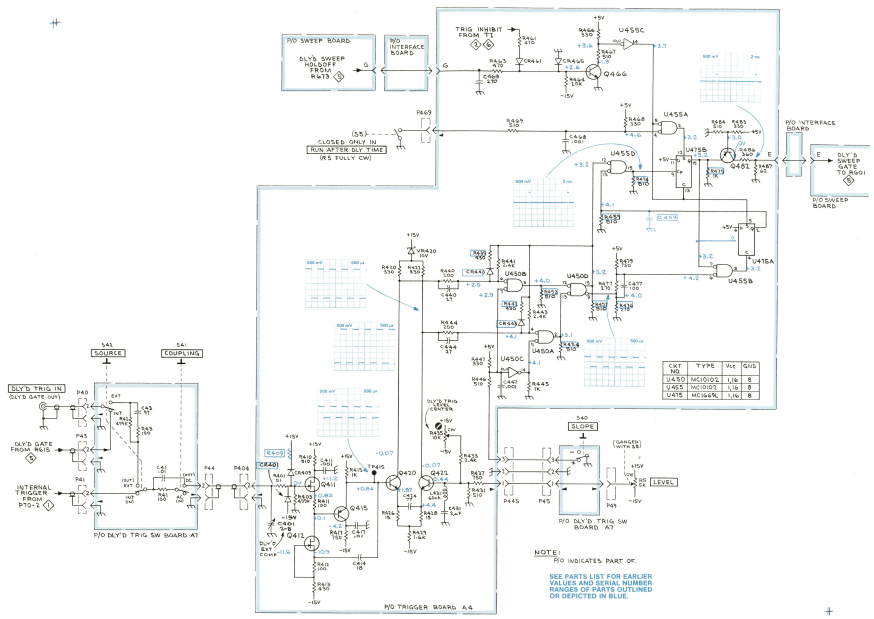


NOTE:
P/O INDICATES PART OF.

SEE PARTS LIST FOR EARLIER VALUES AND SERIAL NUMBER RANGES OF PARTS OUTLINED OR DEPICTED IN BLUE.



DELAYED TRIGGER GENERATOR 4 mgf 1172

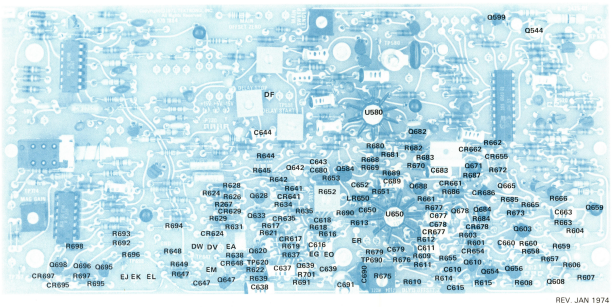


REV. JAN 1974

Fig. 6-11A. P/O A6. Partial Sweep circuit board, SNB090000 and up.

Ⓐ

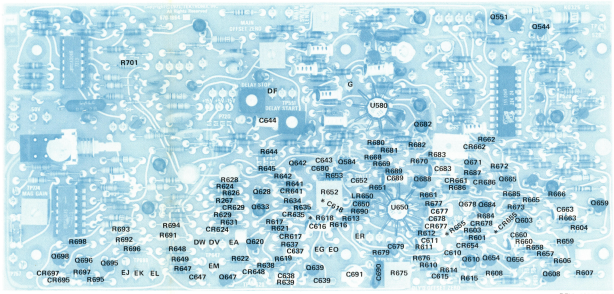


NOTE:

See Fig. 6-3 for location of components not identified here.

*See Part List for serial number ranges.

*R609 added to back of board

REV. JAN 1974

Fig. 6-11B. P/O A6. Partial Sweep circuit board, below SNB090000.

Ⓒ

## VOLTAGES AND WAVEFORMS

The voltages and waveforms shown on this diagram were obtained by using the recommended test equipment and test set-ups listed below.

### RECOMMENDED TEST EQUIPMENT

| ITEM | SPECIFICATIONS | | RECOMMENDED TYPE |
|---|---|---|---|
| Oscilloscope | Frequency response<br>Deflection factor<br>Input impedance<br>Sweep rate | DC to 65 MHz<br>5 mV to 5 V/Div<br>10 MΩ, 20 pF<br>500 ns | Tektronix 7603 or 7613 equipped with 7A15A Amplifier and 7B50 Time-Base Unit, or equivalent. |
| Probe | Fast rise 10X attenuation probe compatible with the vertical amplifier of the test oscilloscope. | | Tektronix P6053A, or equivalent. |
| Voltmeter (Non-loading digital multimeter) | Input impedance<br>Range | 10 MΩ<br>0 – 500 V | Tektronix 7D13 Digital Multimeter (test oscilloscope must have readout system) or Fairchild Model 7050, or equivalent. |
| Extender | Required for extending the 7B53AN from the mainframe when making waveform and voltage measurements. | | Tektronix extender plug-in, Tektronix Part Number 067-0589-00 or Tektronix flexible extender, Tektronix Part Number 067-0616-00, or equivalent. |

### Voltage Conditions

The 7B53AN Unit under test must be connected to a mainframe separate from the test oscilloscope. No signal is applied for voltage measurements. Voltmeter common is connected to chassis ground.

### 7B53AN Control Settings

| | |
|---|---|
| MAIN TRIGGERING | |
| MODE | AUTO |
| COUPLING | AC |
| SOURCE | INT |
| SLOPE | (+) |
| LEVEL | Control center |
| TIME/DIV OR DLY TIME | 1 ms |
| DLY'D Time/Division | 0.5 ms (press in for DLY'D display mode) |
| VARIABLE | CAL (pull out for MIXED display mode) |
| DELAY TIME MULT | 5.00 |
| MAG | X1 |
| POSITION | Center display horizontally |
| DLY'D TRIG | |
| LEVEL | Control center |
| SLOPE | (+) |
| COUPLING | AC |
| SOURCE | INT |

### Waveform Conditions

Front panel controls are set the same as for voltage measurements. The test oscilloscope 0.4 Volt calibration signal is applied to the vertical amplifier of the mainframe to which the 7B53AN is connected. The vertical amplifier of the system under test is set for 100 mV/Division. The test oscilloscope is triggered from the +GATE OUT (MAIN) of the mainframe under test; vertical input is AC coupled.

Tolerances of voltages and waveforms shown are ±20%.

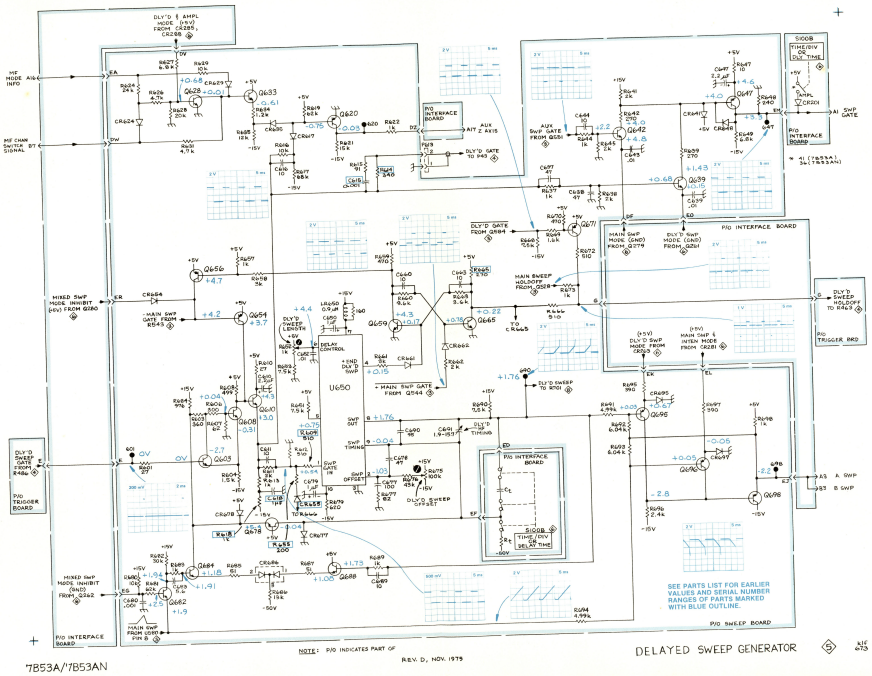

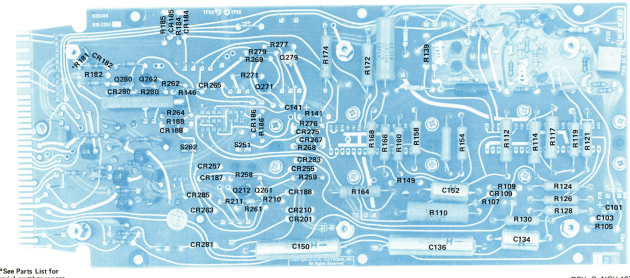


*See Parts List for serial number ranges.

Back of board C138

Fig. 6-12. P/O A1. Partial Interface circuit board (7B53A only).

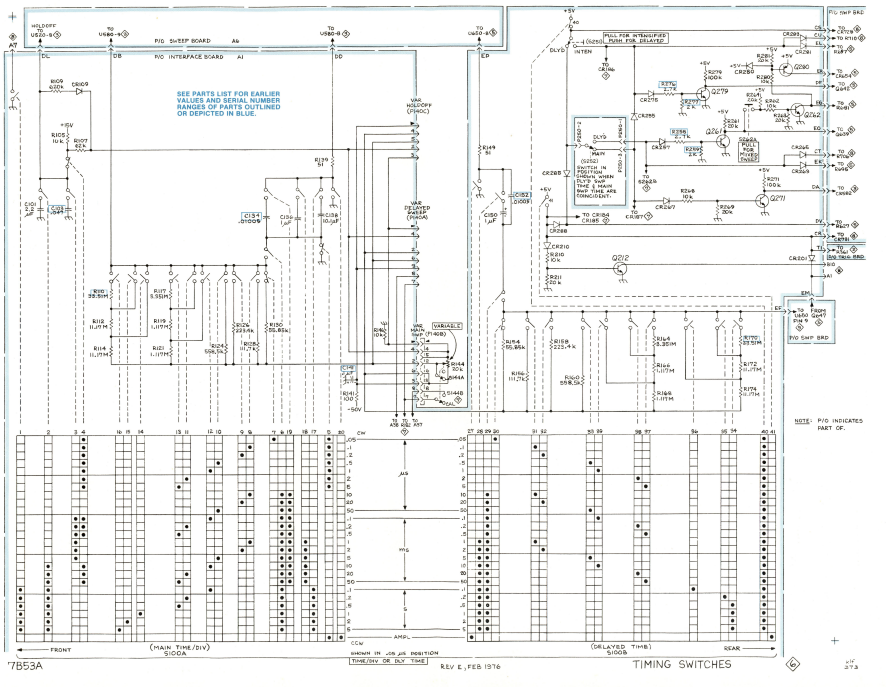
SEE PARTS LIST FOR EARLIER VALUES AND SERIAL NUMBER RANGES OF PARTS OUTLINED OR DEPICTED IN BLUE.
P/O SWEEP BOARD A6
P/O INTERFACE BOARD A1
P/O SWP BRD
NOTE: P/O INDICATES PART OF.
FRONT
(MAIN TIME/DIV) S100A
(DELAYED TIME) S100B
REAR
SHOWN IN .05 μS POSITION
TIME/DIV OR DLY TIME
7B53A
REV E, FEB 1976
TIMING SWITCHES

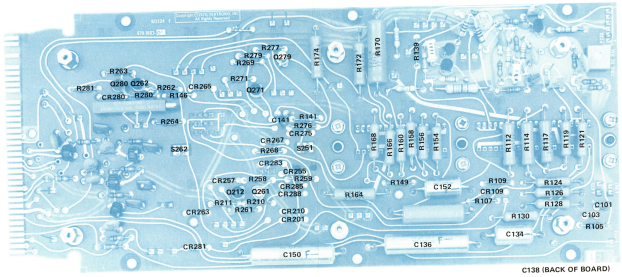


Fig. 6-13. P/O A1. Partial Interface circuit board (7B53AN only).

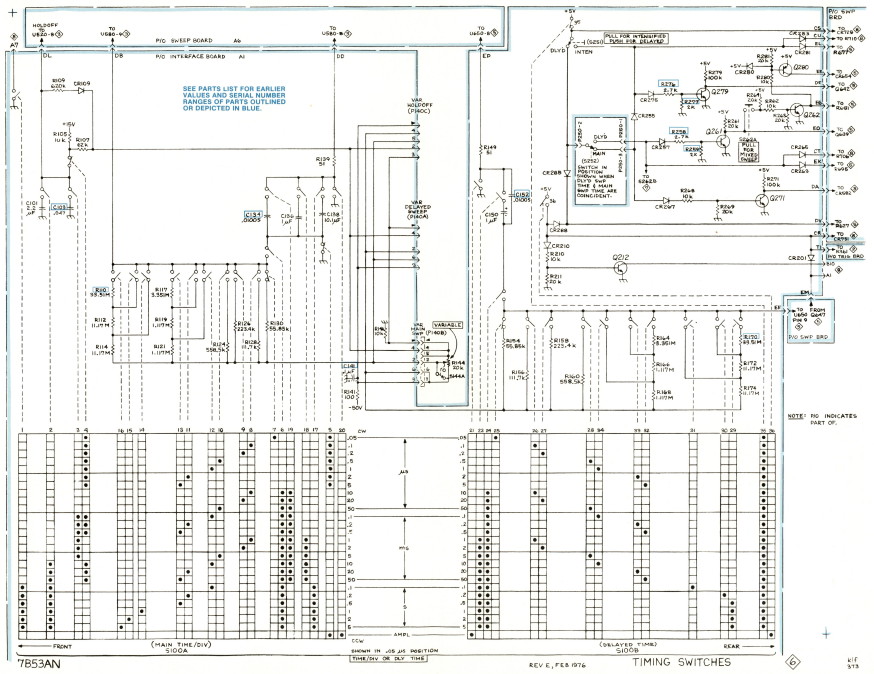


7853AN

REV E, FEB 1976

TIMING SWITCHES

6

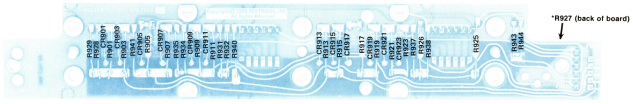


NOTE:
See Fig. 6-12 for location of components not identified here.

*See Parts List for serial number ranges.

Fig. 6-14. Readout circuit board (7B53A only).

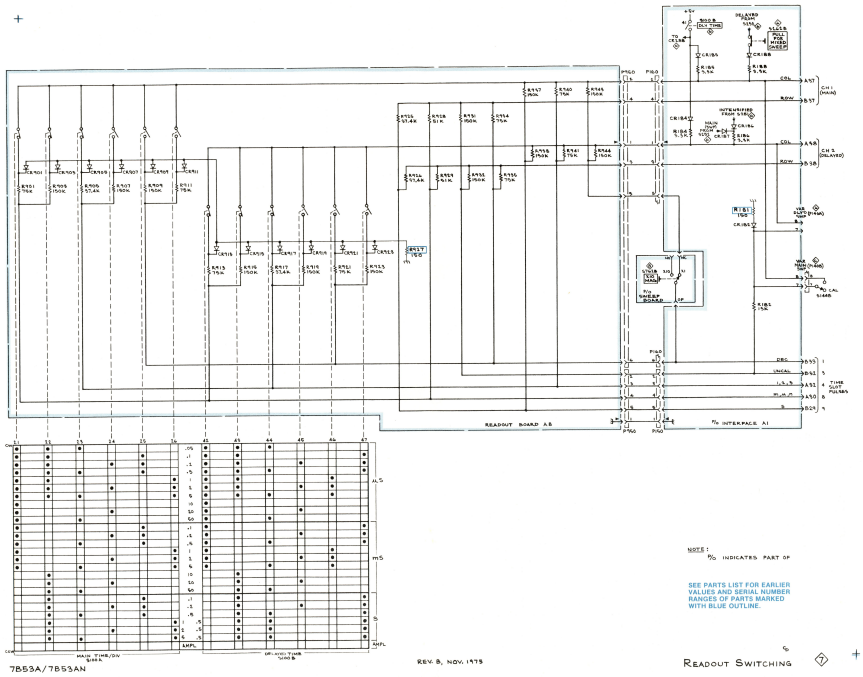


7853A/7853AN

REV. B, NOV. 1978

Readout Switching

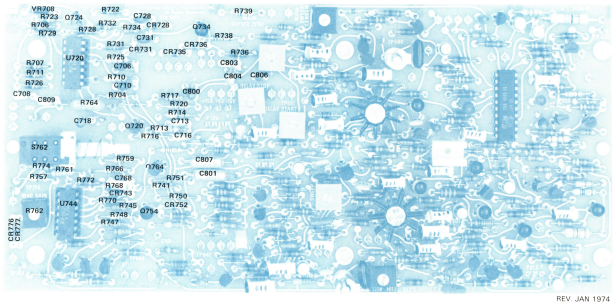


REV. JAN 1974

Fig. 6-15A. P/O A6. Partial Sweep circuit board, SN8090000 and up.

Ⓐ

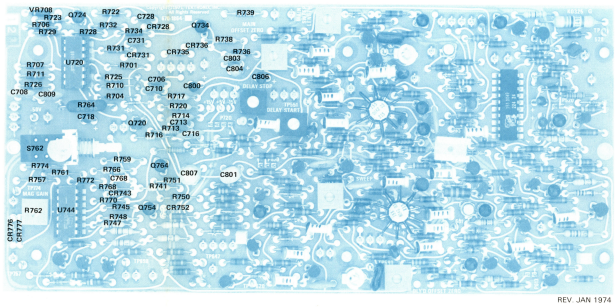


REV. JAN 1974

Fig. 6-15B. P/O A6. Partial Sweep circuit board, below SN8090000.

Ⓑ

## VOLTAGES AND WAVEFORMS

The voltages and waveforms shown on this diagram were obtained by using the recommended test equipment and test set-ups listed below.

### RECOMMENDED TEST EQUIPMENT

| ITEM | SPECIFICATIONS | RECOMMENDED TYPE |
|---|---|---|
| Oscilloscope | Frequency response: DC to 65 MHz<br>Deflection factor: 5 mV to 5 V/Div<br>Input impedance: 10 MΩ, 20 pF<br>Sweep rate: 500 ns | Tektronix 7603 or 7613 equipped with 7A15A Amplifier and 7B50 Time-Base Unit, or equivalent. |
| Probe | Fast rise 10X attenuation probe compatible with the vertical amplifier of the test oscilloscope. | Tektronix P6053A, or equivalent. |
| Voltmeter (Non-loading digital multimeter) | Input impedance: 10 MΩ<br>Range: 0 – 500 V | Tektronix 7D13 Digital Multimeter (test oscilloscope must have readout system) or Fairchild Model 7050, or equivalent. |
| Extender | Required for extending the 7B53AN from the mainframe when making waveform and voltage measurements. | Tektronix extender plug-in, Tektronix Part Number 067-0589-00 or Tektronix flexible extender, Tektronix Part Number 067-0616-00, or equivalent. |

### Voltage Conditions

The 7B53AN Unit under test must be connected to a mainframe separate from the test oscilloscope. No signal is applied for voltage measurements. Voltmeter common is connected to chassis ground.

### 7B53AN Control Settings

| | |
|---|---|
| MAIN TRIGGERING | |
| MODE | AUTO |
| COUPLING | AC |
| SOURCE | INT |
| SLOPE | (+) |
| LEVEL | Control center |
| TIME/DIV OR DLY TIME | 1 ms |
| DLY'D Time/Division | 0.5 ms (press in for DLY'D display mode) |
| VARIABLE | CAL (pull out for MIXED display mode) |
| DELAY TIME MULT | 5.00 |
| MAG | X1 |
| POSITION | Center display horizontally |
| DLY'D TRIG | |
| LEVEL | Control center |
| SLOPE | (+) |
| COUPLING | AC |
| SOURCE | INT |

### Waveform Conditions

Front panel controls are set the same as for voltage measurements. The test oscilloscope 0.4 Volt calibration signal is applied to the vertical amplifier of the mainframe to which the 7B53AN is connected. The vertical amplifier of the system under test is set for 100 mV/Division. The test oscilloscope is triggered from the + GATE OUT (MAIN) of the mainframe under test; vertical input is AC coupled.

Tolerances of voltages and waveforms shown are ±20%.

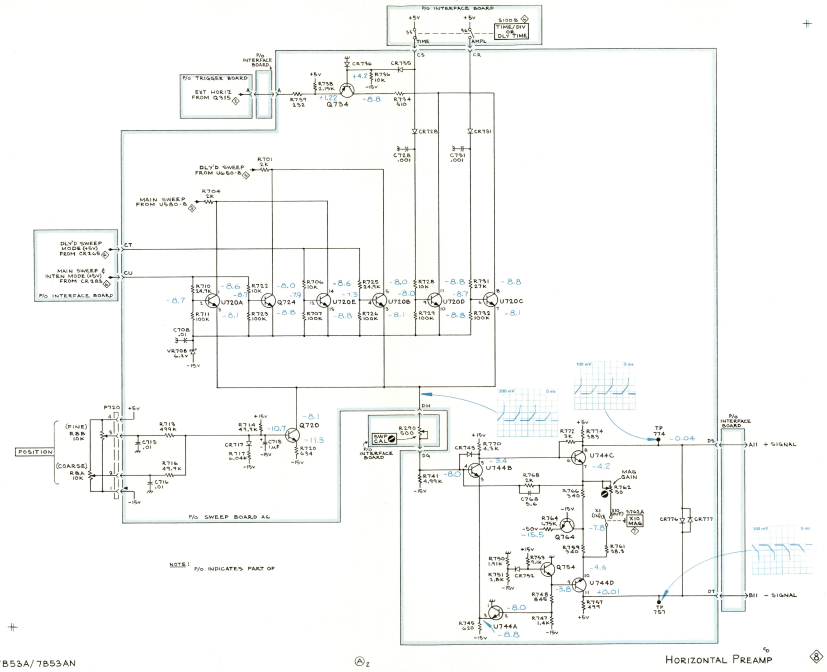

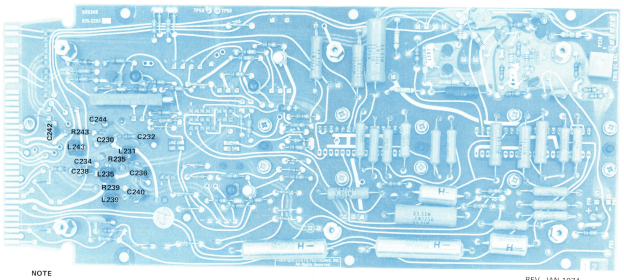


NOTE
See Fig. 6-15 for components not identified here.

REV. JAN 1974

Fig. 6-16. P/O A1. Partial Interface circuit board.

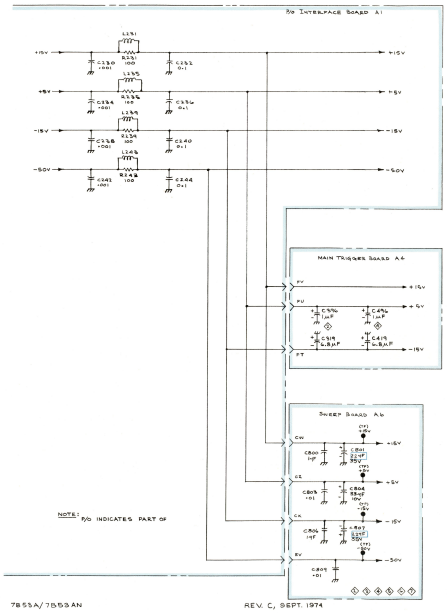


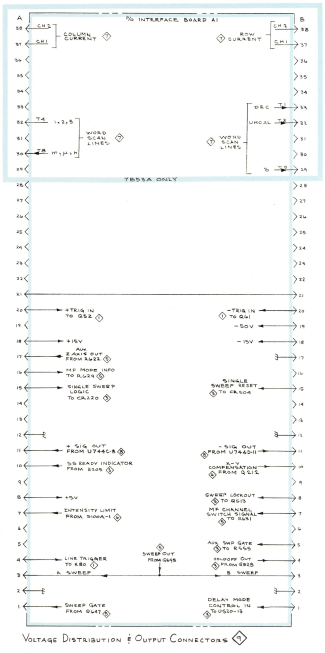


7855A/7853AN

REV. C, SEPT. 1974

VOLTAGE DISTRIBUTION & OUTPUT CONNECTORS

DEH 373

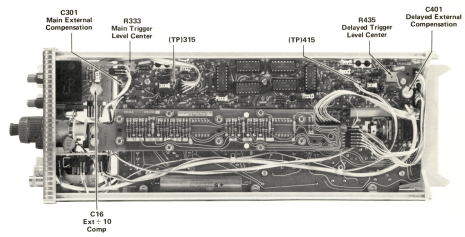


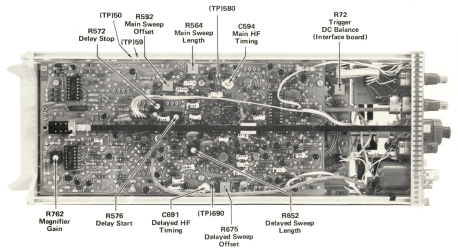


Fig. 6-17. Location of adjustments in the 7B53A/7B53AN.

# REPLACEABLE MECHANICAL PARTS

## PARTS ORDERING INFORMATION

Replacement parts are available from or through your local Tektronix, Inc. Field Office or representative.

Changes to Tektronix instruments are sometimes made to accommodate improved components as they become available, and to give you the benefit of the latest circuit improvements developed in our engineering department. It is therefore important, when ordering parts, to include the following information in your order: Part number, instrument type or number, serial number, and modification number if applicable.

If a part you have ordered has been replaced with a new or improved part, your local Tektronix, Inc. Field Office or representative will contact you concerning any change in part number.

Change information, if any, is located at the rear of this manual.

## SPECIAL NOTES AND SYMBOLS

| | |
|---|---|
| X000 | Part first added at this serial number |
| 00X | Part removed after this serial number |

## FIGURE AND INDEX NUMBERS

Items in this section are referenced by figure and index numbers to the illustrations.

## INDENTATION SYSTEM

This mechanical parts list is indented to indicate item relationships. Following is an example of the indentation system used in the description column.

*1 2 3 4 5* *Name & Description*

*Assembly and/or Component*
*Attaching parts for Assembly and/or Component*
- - - * - - -
*Detail Part of Assembly and/or Component*
*Attaching parts for Detail Part*
- - - * - - -
*Parts of Detail Part*
*Attaching parts for Parts of Detail Part*
- - - * - - -

Attaching Parts always appear in the same indentation as the item it mounts, while the detail parts are indented to the right. Indented items are part of, and included with, the next higher indentation. The separation symbol - - - * - - - indicates the end of attaching parts.

**Attaching parts must be purchased separately, unless otherwise specified.**

## ITEM NAME

In the Parts List, an Item Name is separated from the description by a colon (:). Because of space limitations, an Item Name may sometimes appear as incomplete. For further Item Name identification, the U.S. Federal Cataloging Handbook H6-1 can be utilized where possible.

## ABBREVIATIONS

| | |
|---|---|
| " | INCH |
| # | NUMBER SIZE |
| ACTR | ACTUATOR |
| ADPTR | ADAPTER |
| ALIGN | ALIGNMENT |
| AL | ALUMINUM |
| ASSEM | ASSEMBLED |
| ASSY | ASSEMBLY |
| ATTEN | ATTENUATOR |
| AWG | AMERICAN WIRE GAGE |
| BD | BOARD |
| BRKT | BRACKET |
| BRS | BRASS |
| BRZ | BRONZE |
| BSHG | BUSHING |
| CAB | CABINET |
| CAP | CAPACITOR |
| CER | CERAMIC |
| CHAS | CHASSIS |
| CKT | CIRCUIT |
| COMP | COMPOSITION |
| CONN | CONNECTOR |
| COV | COVER |
| CPLG | COUPLING |
| CRT | CATHODE RAY TUBE |
| DEG | DEGREE |
| DWR | DRAWER |
| ELCTRN | ELECTRON |
| ELEC | ELECTRICAL |
| ELCTLT | ELECTROLYTIC |
| ELEM | ELEMENT |
| EPL | ELECTRICAL PARTS LIST |
| EQPT | EQUIPMENT |
| EXT | EXTERNAL |
| FIL | FILLISTER HEAD |
| FLEX | FLEXIBLE |
| FLH | FLAT HEAD |
| FLTR | FILTER |
| FR | FRAME or FRONT |
| FSTNR | FASTENER |
| FT | FOOT |
| FXD | FIXED |
| GSKT | GASKET |
| HDL | HANDLE |
| HEX | HEXAGON |
| HEX HD | HEXAGONAL HEAD |
| HEX SOC | HEXAGONAL SOCKET |
| HLCPS | HELICAL COMPRESSION |
| HLEXT | HELICAL EXTENSION |
| HV | HIGH VOLTAGE |
| IC | INTEGRATED CIRCUIT |
| ID | INSIDE DIAMETER |
| IDENT | IDENTIFICATION |
| IMPLR | IMPELLER |
| IN | INCH |
| INCAND | INCANDESCENT |
| INSUL | INSULATOR |
| INTL | INTERNAL |
| LPHLDR | LAMPHOLDER |
| MACH | MACHINE |
| MECH | MECHANICAL |
| MTG | MOUNTING |
| NIP | NIPPLE |
| NON WIRE | NOT WIRE WOUND |
| OBD | ORDER BY DESCRIPTION |
| OD | OUTSIDE DIAMETER |
| OVH | OVAL HEAD |
| PH BRZ | PHOSPHOR BRONZE |
| PL | PLAIN or PLATE |
| PLSTC | PLASTIC |
| PN | PART NUMBER |
| PNH | PAN HEAD |
| PWR | POWER |
| RCPT | RECEPTACLE |
| RES | RESISTOR |
| RGD | RIGID |
| RLF | RELIEF |
| RTNR | RETAINER |
| SCH | SOCKET HEAD |
| SCOPE | OSCILLOSCOPE |
| SCR | SCREW |
| SE | SINGLE END |
| SECT | SECTION |
| SEMICOND | SEMICONDUCTOR |
| SHLD | SHIELD |
| SHLDR | SHOULDERED |
| SKT | SOCKET |
| SL | SLIDE |
| SLFLKG | SELF-LOCKING |
| SLVG | SLEEVING |
| SPR | SPRING |
| SQ | SQUARE |
| SST | STAINLESS STEEL |
| STL | STEEL |
| SW | SWITCH |
| T | TUBE |
| TERM | TERMINAL |
| THD | THREAD |
| THK | THICK |
| TNSN | TENSION |
| TPG | TAPPING |
| TRH | TRUSS HEAD |
| V | VOLTAGE |
| VAR | VARIABLE |
| W/ | WITH |
| WSHR | WASHER |
| XFMR | TRANSFORMER |
| XSTR | TRANSISTOR |

# CROSS INDEX MFR. CODE NUMBER TO MANUFACTURER

| MFR.CODE | MANUFACTURER | ADDRESS | CITY,STATE,ZIP |
|---|---|---|---|
| 00779 | AMP, INC. | P. O. BOX 3608 | HARRISBURG, PA 17105 |
| 01295 | TEXAS INSTRUMENTS, INC., SEMICONDUCTOR GROUP | P. O. BOX 5012 | DALLAS, TX 75222 |
| 01963 | CHERRY ELECTRICAL PRODUCTS CORP. | 3600 SUNSET AVE. | WAUKEGAN, IL 60085 |
| 05129 | KILO ENGINEERING CO. | 2015 D | LA VERNE, CA 91750 |
| 05820 | WAKEFIELD ENGINEERING, INC. | AUDUBON ROAD | WAKEFIELD, MA 01880 |
| 07111 | PNEUMO DYNAMICS CORP. | 4800 PRUDENTIAL TOWER | BOSTON, MA 44103 |
| 08261 | SPECTRA-STRIP CORP. | 7100 LAMPSON AVE. | GARDEN GROVE, CA 92642 |
| 10389 | CHICAGO SWITCH, INC. | 2035 WABANSIA AVE. | CHICAGO, IL 60647 |
| 12327 | FREEWAY CORP. | 9301 ALLEN DR. | CLEVELAND, OH 44125 |
| 13257 | ESNA LTD. | 10 ESNA PARK DR. | MARKHAM, ONTARIO, CANADA |
| 22526 | BERG ELECTRONICS, INC. | YOUK EXPRESSWAY | NEW CUMBERLAND, PA 17070 |
| 23499 | GAVITT WIRE AND CABLE, DIVISION OF RSC INDUSTRIES, INC. | 455 N. QUINCE ST. | ESCONDIDO, CA 92025 |
| 24931 | SPECIALTY CONNECTOR CO., INC. | 3560 MADISON AVE. | INDIANAPOLIS, IN 46227 |
| 70276 | ALLEN MFG. CO. | P. O. DRAWER 570 | HARTFORD, CT 06101 |
| 71279 | CAMBRIDGE THERMIONIC CORP. | 445 CONCORD AVE. | CAMBRIDGE, MA 02138 |
| 71590 | CENTRALAB ELECTRONICS, DIV. OF GLOBE-UNION, INC. | 5757 N. GREEN BAY AVE. | MILWAUKEE, WI 53201 |
| 71785 | TRW ELECTRONIC COMPONENTS, CINCH CONNECTOR OPERATIONS | 1501 MORSE AVE. | ELK GROVE VILLAGE, IL 60007 |
| 73743 | FISCHER SPECIAL MFG. CO. | 446 MORGAN ST. | CINCINNATI, OH 45206 |
| 74445 | HOLO-KROME CO. | 31 BROOK ST. WEST | HARTFORD, CT 06110 |
| 77250 | PHEOLL MANUFACTURING CO., DIVISION OF ALLIED PRODUCTS CORP. | 5700 W. ROOSEVELT RD. | CHICAGO, IL 60650 |
| 78189 | ILLINOIS TOOL WORKS, INC. SHAKEPROOF DIVISION | ST. CHARLES ROAD | ELGIN, IL 60120 |
| 79807 | WROUGHT WASHER MFG. CO. | 2100 S. O BAY ST. | MILWAUKEE, WI 53207 |
| 80009 | TEKTRONIX, INC. | P. O. BOX 500 | BEAVERTON, OR 97077 |
| 83385 | CENTRAL SCREW CO. | 2530 CRESCENT DR. | BROADVIEW, IL 60153 |
| 83501 | GAVITT WIRE AND CABLE, DIVISION OF RSC INDUSTRIES, INC. | CENTRAL ST. | BROOKFIELD, MA 01506 |
| 87308 | N. L. INDUSTRIES, INC., SOUTHERN SCREW DIV. | P. O. BOX 1360 | STATESVILLE, NC 28677 |
| 97464 | INDUSTRIAL RETAINING RING CO. | 57 CORDIER ST. | IRVINGTON, NJ 07111 |
| 98291 | SEALECTRO CORP. | 225 HOYT | MAMARONECK, NY 10544 |

FIGURE 1 EXPLODED

| Fig. & Index No. | Tektronix Part No. | Serial/Model No. Eff | Serial/Model No. Dscont | Qty | 1 2 3 4 5 Name & Description | Mfr Code | Mfr Part Number |
|---|---|---|---|---|---|---|---|
| 1-1 | 366-1391-00 | | | 1 | KNOB:GRAY | 80009 | 366-1391-00 |
| -2 | 366-1077-00 | | | 1 | KNOB:GRAY | 80009 | 366-1077-00 |
| | 213-0153-00 | | | 1 | . SETSCREW:5-40 X 0.125 INCH,HEX SOC STL | 74445 | OBD |
| -3 | 366-1391-00 | | | 1 | KNOB:GRAY | 80009 | 366-1391-00 |
| -4 | 366-1077-00 | | | 1 | KNOB:GRAY | 80009 | 366-1077-00 |
| | 213-0153-00 | | | 1 | . SETSCREW:5-40 X 0.125 INCH,HEX SOC STL | 74445 | OBD |
| -5 | 366-0494-00 | | | 1 | KNOB:GRAY | 80009 | 366-0494-00 |
| | 213-0153-00 | | | 1 | . SETSCREW:5-40 X 0.125 INCH,HEX SOC STL | 74445 | OBD |
| -6 | 366-1405-00 | | | 1 | KNOB:GRAY | 80009 | 366-1405-00 |
| | 213-0153-00 | | | 1 | . SETSCREW:5-40 X 0.125 INCH,HEX SOC STL | 74445 | OBD |
| -7 | 366-1321-00 | | | 1 | KNOB:GRAY | 80009 | 366-1321-00 |
| | 213-0153-00 | | | 2 | . SETSCREW:5-40 X 0.125 INCH,HEX SOC STL | 74445 | OBD |
| -8 | 354-0410-00 | | | 1 | RING,KNOB SKIRT:0.252 ID X 0.85 OD | 80009 | 354-0410-00 |
| | 213-0153-00 | | | 2 | . SETSCREW:5-40 X 0.125 INCH,HEX SOC STL | 74445 | OBD |
| -9 | 366-1257-93 | | | 1 | PUSH BUTTON:+10 MAG | 80009 | 366-1257-93 |
| -10 | 366-1257-90 | | | 1 | PUSH BUTTON:+,- | 80009 | 366-1257-90 |
| -11 | 366-1257-91 | | | 1 | PUSH BUTTON:AC,DC | 80009 | 366-1257-91 |
| -12 | 366-1257-92 | | | 1 | PUSH BUTTON:INT,EXT | 80009 | 366-1257-92 |
| -13 | 426-0681-00 | | | 4 | FR,PUSH BUTTON:GRAY PLASTIC | 80009 | 426-0681-00 |
| -14 | 358-0378-00 | | | 1 | BUSHING,SLEEVE:PRESS MOUNT | 80009 | 358-0378-00 |
| -15 | 366-1058-50 | | | 1 | KNOB:LATCH(7B53A ONLY) | 80009 | 366-1058-50 |
| | 366-1058-35 | | | 1 | KNOB:LATCH(7B53AN ONLY) | 80009 | 366-1058-35 |
| -16 | 214-1095-00 | | | 1 | PIN,SPG,SPLIT:0.094 OD X 0.187 INCH LONG | 13257 | 52-022-094-0187 |
| -17 | 337-1064-04 | | | 2 | SHIELD,ELEC:SIDE | 80009 | 337-1064-00 |
| -18 | 333-1542-02 | | | 1 | PANEL,FRONT: | 80009 | 333-1542-02 |
| -19 | 401-0126-00 | | | 1 | BRG,KNOB SKIRT:0.861 ID X 0.975 OD | 80009 | 401-0126-00 |
| -20 | ----- ----- | | | 1 | RESISTOR,VAR: | | |
| | | | | | (ATTACHING PARTS) | | |
| -21 | 331-0247-00 | | | 1 | DIAL,CONTROL:10 TURN | 05129 | 77131 |
| | | | | | - - - * - - - | | |
| -22 | 131-0955-00 | | | 2 | CONNECTOR,RCPT,:BNC,FEMALE | 24931 | 28JR200-1 |
| | | | | | (ATTACHING PARTS) | | |
| -23 | 210-0590-00 | | | 1 | NUT,PLAIN,HEX.:0.375 X 0.438 INCH,STL | 73743 | 2X28269-402 |
| | 210-0012-00 | | | 1 | WASHER,LOCK:INTL,0.375 ID X 0.50" OD STL | 78189 | 1220-02-00-0541C |
| | | | | | - - - * - - - | | |
| -24 | 131-0373-00 | | | 1 | TERMINAL,STUD: | 71279 | 4894-1-0516 |
| | | | | | (ATTACHING PARTS) | | |
| -25 | 210-0405-00 | | | 1 | NUT,PLAIN,HEX.:2-56 X 0.188 INCH,BRS | 73743 | 2X12157-402 |
| -26 | 210-0001-00 | | | 1 | WASHER,LOCK:INTL,0.092 ID X 0.18"OD,STL | 78189 | 1202-00-00-0541C |
| | | | | | - - - * - - - | | |
| -27 | 337-1317-00 | | | 1 | SHIELD,ELEC: | 80009 | 337-1317-00 |
| -28 | ----- ----- | | | 2 | RESISTOR,VAR: | | |
| | | | | | (ATTACHING PARTS FOR EACH) | | |
| -29 | 210-0583-00 | | | 1 | NUT,PLAIN,HEX.:0.25-32 X 0.312 INCH,BRS | 73743 | 2X20319-402 |
| | | | | | - - - * - - - | | |
| -30 | ----- ----- | | | 1 | RESISTOR,VAR: | | |
| | | | | | (ATTACHING PARTS) | | |
| -31 | 210-0583-00 | B010100 | B109999X | 1 | NUT,PLAIN,HEX.:0.25-32 X 0.312 INCH,BRS | 73743 | 2X20319-402 |
| -32 | 210-0046-00 | B010100 | B109999X | 2 | WASHER,LOCK:INTL,0.26 ID X 0.40" OD,STL | 78189 | 1214-05-00-0541C |
| | 210-0583-00 | B110000 | | 1 | NUT,PLAIN,HEX.:0.25-32 X 0.312 INCH,BRS | 73743 | 2X20319-402 |
| | 210-0940-00 | B110000 | | 1 | WASHER,FLAT:0.25 ID X 0.375 INCH OD,STL | 79807 | OBD |
| | | | | | - - - * - - - | | |
| -33 | ----- ----- | | | 1 | CKT BOARD ASSY:DELAYED TRIGGER(SEE A7 EPL) | | |
| -34 | 131-0608-00 | | | 8 | . CONTACT,ELEC:0.365 INCH LONG | 22526 | 47357 |
| | 131-0589-00 | | | 4 | . CONTACT,ELEC:0.46 INCH LONG | 22526 | 47350 |
| -35 | 260-1133-00 | | | 1 | . SWITCH,PUSH:3 BUTTON,DOUBLE POLE | 80009 | 260-1133-00 |
| -36 | 220-0637-00 | | | 1 | . NUT,BLOCK:1.05 X 0.50 X0.188 INCH OA | 80009 | 220-0637-00 |
| | | | | | (ATTACHING PARTS) | | |
| -37 | 211-0022-00 | | | 2 | . SCREW,MACHINE:2-56 X 0.188 INCH,PNH STL | 83385 | OBD |
| | | | | | - - - * - - - | | |
| | | | | | (ATTACHING PARTS FOR CKT BD) | | |
| -38 | 211-0101-00 | | | 2 | SCREW,MACHINE:4-40 X 0.25" 100 DEG,FLH STL | 83385 | OBD |
| | | | | | - - - * - - - | | |

| Fig. & Index No. | Tektronix Part No. | Serial/Model No. Eff | Dscont | Qty | 1 2 3 4 5 Name & Description | Mfr Code | Mfr Part Number |
|---|---|---|---|---|---|---|---|
| 1-39 | ----- ----- | | | 1 | CKT BD ASSY:SWITCH--TRIG SOURCE(SEE A2 EPL) | | |
| -40 | 131-0589-00 | | | 7 | . CONTACT,ELEC:0.46 INCH LONG | 22526 | 47350 |
| | | | | | (ATTACHING PARTS) | | |
| | 211-0156-00 | | | 2 | SCREW,MACHINE:1-72 X 0.25",82 DEG,FLH STL | 77250 | OBD |
| | | | | | - - - * - - - | | |
| -41 | ----- ----- | | | 1 | CKT BOARD ASSY:SWITCH--TRIG COUPLING(SEE A3 EPL) | | |
| | | | | | (ATTACHING PARTS) | | |
| -42 | 211-0156-00 | | | 2 | SCREW,MACHINE:1-72 X 0.25",82 DEG,FLH STL | 77250 | OBD |
| | | | | | - - - * - - - | | |
| -43 | ----- ----- | | | 1 | CKT BOARD ASSY:SWITCH--TRIG MODE(SEE A5 EPL) | | |
| -44 | 131-0608-00 | | | 6 | . CONTACT,ELEC:0.365 INCH LONG | 22526 | 47357 |
| | | | | | (ATTACHING PARTS) | | |
| | 211-0156-00 | | | 2 | SCREW,MACHINE:1-72 X 0.25",82 DEG,FLH STL | 77250 | OBD |
| | | | | | - - - * - - - | | |
| -45 | 200-0935-00 | | | 1 | BASE,LAMPHOLDER:0.29 OD X 0.19 CASE | 80009 | 200-0935-00 |
| -46 | 378-0602-00 | | | 1 | LENS,LIGHT:GREEN | 80009 | 378-0602-00 |
| -47 | 352-0157-00 | | | 1 | LAMPHOLDER:WHITE PLASTIC | 80009 | 352-0157-00 |
| -48 | 386-1447-58 | | | 1 | SUBPANEL,FRONT: | 80009 | 386-1447-58 |
| | | | | | (ATTACHING PARTS) | | |
| -49 | 213-0192-00 | | | 4 | SCR,TPG,THD FOR:6-32 X 0.50 INCH,PNH STL | 87308 | OBD |
| | | | | | - - - * - - - | | |
| -50 | ----- ----- | | | 1 | CKT BOARD ASSY:TRIGGER(SEE A4 EPL) | | |
| -51 | 131-0589-00 | | | 2 | . CONTACT,ELEC:0.46 INCH LONG | 22526 | 47350 |
| | 131-0608-00 | | | 11 | . CONTACT,ELEC:0.365 INCH LONG | 22526 | 47357 |
| -52 | 136-0252-04 | B010100 | B113699 | 42 | . CONTACT,ELEC:0.188 INCH LONG | 22526 | 75060 |
| | 136-0350-00 | B113700 | | 14 | . SOCKET,PLUG-IN:3 PIN,LOW PROFILE | 80009 | 136-0350-00 |
| -53 | 136-0263-03 | B010100 | B158929 | 9 | . CONTACT,ELEC:FOR 0.025 INCH SQUARE PIN | 00779 | 86250-2 |
| | 136-0263-04 | B158930 | | 9 | . CONTACT,ELEC:FOR 0.025 INCH SQUARE PIN | 22526 | 75377-001 |
| -54 | 136-0260-02 | | | 6 | . SOCKET,PLUG-IN:16 CONTACT,LOW CLEARANCE | 01295 | C931602 |
| -55 | 200-0945-00 | | | 2 | . COVER,HALF XSTR:FOR DUAL TO-18 CASE | 80009 | 200-0945-00 |
| -56 | 200-0945-01 | | | 2 | . COVER,HALF XSTR:FOR DUAL TO-18 CS,2-56 THD | 80009 | 200-0945-01 |
| -57 | 211-0062-00 | | | 2 | . SCREW,MACHINE:2-56 X 0.312 INCH,RDH STL | 83385 | OBD |
| -58 | 214-0579-00 | | | 2 | . TERM.,TEST PT:0.40 INCH LONG | 80009 | 214-0579-00 |
| | | | | | (ATTACHING PARTS FOR CKT BD) | | |
| -59 | 211-0008-00 | | | 3 | SCREW,MACHINE:4-40 X 0.25 INCH,PNH STL | 83385 | OBD |
| -60 | 343-0088-00 | B010100 | B109999 | 2 | CLAMP,LOOP:0.062 INCH DIA | 80009 | 343-0088-00 |
| | 343-0088-00 | B110000 | | 1 | CLAMP,LOOP:0.062 INCH DIA | 80009 | 343-0088-00 |
| -61 | 348-0235-00 | | | 2 | SHLD GSKT,ELEC:4.734 INCH LONG | 80009 | 348-0235-00 |
| -62 | 105-0076-00 | | | 1 | REL BAR,LATCH:PLUG-IN UNIT | 80009 | 105-0076-00 |
| -63 | 214-1280-00 | | | 1 | SPRING,HLCPS:0.14 OD X 1.126"L,0.16"DIA W | 80009 | 214-1280-00 |
| -64 | 214-1054-00 | | | 1 | SPRING,DETENT:LATCH | 80009 | 214-1054-00 |
| -65 | 105-0075-00 | | | 1 | PAWL:0.475 X 0.21 X 0.184 INCH,PLSTC | 80009 | 105-0075-00 |
| -66 | ----- ----- | | | 1 | CKT BOARD ASSY:SWEEP(SEE A6 EPL) | | |
| -67 | 131-0608-00 | B010100 | B089999 | 11 | . CONTACT,ELEC:0.365 INCH LONG | 22526 | 47357 |
| | 131-0608-00 | B090000 | | 12 | . CONTACT,ELEC:0.365 INCH LONG | 22526 | 47357 |
| -68 | 136-0269-02 | | | 2 | . SOCKET,PLUG-IN:14 CONTACT,LOW CLEARANCE | 01295 | C931402 |
| -69 | 136-0252-04 | B010100 | B113699 | 140 | . CONTACT,ELEC:0.188 INCH LONG | 22526 | 75060 |
| | 136-0252-04 | B113700 | B148050 | 37 | . CONTACT,ELEC:0.188 INCH LONG | 22526 | 75060 |
| | 136-0252-04 | B148051 | | 17 | . CONTACT,ELEC:0.188 INCH LONG | 22526 | 75060 |
| | 136-0634-00 | B148051 | | 1 | . SOCKET,PLUG-IN:20 LEAD DIP,CKT BD MTG | 73803 | C932002 |
| -70 | 136-0263-03 | B010100 | B158929X | 15 | . CONTACT,ELEC:FOR 0.025 INCHSQUARE PIN | 00779 | 86250-2 |
| | 136-0263-04 | B158930 | | 45 | . CONTACT,ELEC:FOR 0.025 INCH SQUARE PIN | 22526 | 75377-001 |
| -71 | 136-0241-00 | B010100 | B089999X | 2 | . SOCKET,PLUG-IN:10 CONTACT,ROUND | 71785 | 133-99-12-064 |
| -72 | 214-0579-00 | B010100 | B089999 | 15 | . TERM.,TEST PT:0.40 INCH LONG | 80009 | 214-0579-00 |
| | 214-0579-00 | B090000 | | 16 | . TERM.,TEST PT:0.40 INCH LONG | 80009 | 214-0579-00 |
| -73 | 214-1292-00 | | | 2 | . HEAT SINK,ELEC:TRANSISTOR | 05820 | 205-AB |
| -74 | 260-1208-00 | | | 1 | . SWITCH,PUSH:DPDT | 71590 | 2KAB010000-359 |
| -75 | 352-0240-00 | | | 1 | . HOLDER,CABLE: | 80009 | 352-0240-00 |
| -76 | 386-2141-00 | | | 1 | . SPRT,EXT SHAFT: | 80009 | 386-2141-00 |
| -77 | 361-0007-00 | | | 1 | . SPACER,SLEEVE:0.250 INCH DIA,PLASTIC | 80009 | 361-0007-00 |
| | | | | | (ATTACHING PARTS FOR CKT BD) | | |
| -78 | 211-0008-00 | | | 6 | SCREW,MACHINE:4-40 X 0.25 INCH,PNH STL | 83385 | OBD |
| | | | | | - - - * - - - | | |
| -79 | 384-1120-00 | | | 1 | EXTENSION SHAFT:10.0 L X 0.123 OD EPOXY-GL | 80009 | 384-11 |
| | 213-0075-00 | | | 2 | . SETSCREW:4-40 X 0.094 INCH,HEX SOC STL | 70276 | OBD |
| -80 | 376-0101-00 | | | 1 | CPLG,SHAFT,RGD: | 80009 | 376-0101-00 |
| -81 | 384-0871-00 | | | 1 | . SHAFT,CAM SW: | 80009 | 384-0871-00 |

FIGURE 1 EXPLODED (cont)

| Fig. & Index No. | Tektronix Part No. | Serial/Model No. Eff | Dscont | Qty | 1 2 3 4 5 Name & Description | Mfr Code | Mfr Part Number |
|---|---|---|---|---|---|---|---|
| 1-82 | 384-1153-00 | | | 1 | . EXTENSION SHAFT: | 80009 | 384-1153-00 |
| -83 | 376-0129-01 | | | 1 | . SPOOL,SW ACTR: | 80009 | 376-0129-01 |
| | 213-0075-00 | | | 2 | . . SETSCREW:4-40 X 0.094 INCH,HEX SOC STL | 70276 | OBD |
| -84 | 105-0340-00 | | | 1 | . ACTR SWITCH,: | 80009 | 105-0340-00 |
| | 213-0022-00 | | | 1 | . . SETSCREW:4-40 X 0.188 INCH,HEX SOC STL | 74445 | OBD |
| -85 | 376-0092-01 | | | 1 | . CPLG HALF,SHAFT:W/RING | 80009 | 376-0092-01 |
| | 213-0048-00 | | | 2 | . . SETSCREW:4-40 X 0.125 INCH,HEX SOC STL | 74445 | OBD |
| -86 | 376-0092-03 | | | 1 | . CPLG HALF,SHAFT:W/RING | 80009 | 376-0092-03 |
| | 213-0048-00 | | | 2 | . . SETSCREW:4-40 X 0.125 INCH,HEX SOC STL | 74445 | OBD |
| -87 | 214-1630-00 | B010100 | B139999X | 1 | . DETENT,SWITCH: | 80009 | 214-1630-00 |
| -88 | 131-0963-00 | | | 1 | . CONTACT,ELEC:GROUNDING | 80009 | 131-0963-00 |
| -89 | ----- ----- | | | 1 | . CIRCUIT BOARD ASSY:READOUT(SEE A8 EPL) | | |
| -90 | 131-0590-00 | | | 6 | . . CONTACT,ELEC:0.71 INCH LONG | 22526 | 47351 |
| | 131-0589-00 | | | 5 | . . CONTACT,ELEC:0.46 INCH LONG | 22526 | 47350 |
| | 131-0157-00 | | | 2 | . . CONTACT,ELEC: | 98291 | STSM1C2 |
| -91 | 131-0604-00 | | | 12 | . . CONTACT,ELEC:0.025 SQ X 0.365 INCH LONG | 80009 | 131-0604-00 |
| -92 | 260-1309-00 | | | 1 | . . SWITCH,PUSH:4PDT: | 01963 | E63-10H |
| -93 | 211-0185-00 | | | 2 | . . SCREW,MACHINE:2-56 X 0.438",PNH,STL | 07111 | OBD |
| -94 | 210-0850-00 | | | 2 | . . WASHER,FLAT:0.093 ID X 0.281 INCH OD | 12327 | OBD |
| -95 | 220-0619-00 | | | 1 | . . NUT,PLAIN,PLATE: | 80009 | 220-0619-00 |
| -96 | 200-1440-00 | | | 2 | . . COVER,CAM SW: | 80009 | 200-1440-00 |
| | | | | | (ATTACHING PARTS FOR EACH) | | |
| -97 | 211-0116-00 | | | 2 | . . SCR,ASSEM WSHR:4-40 X 0.312 INCH,PNH BRS | 83385 | OBD |
| | 210-0406-00 | | | 2 | . . NUT,PLAIN,HEX.:4-40 X 0.188 INCH,BRS | 73743 | 2X12161-402 |
| | | | | | - - - * - - - | | |
| -98 | 354-0391-00 | | | 2 | . . RING,RETAINING:0.395"FREE ID X 0.025" STL | 97464 | 3100-43-CD |
| -99 | 401-0081-02 | | | 2 | . . BEARING,CAM SW:FRONT | 80009 | 401-0081-02 |
| | | | | | (ATTACHING PARTS FOR EACH) | | |
| -100 | 211-0116-00 | | | 2 | . . SCR,ASSEM WSHR:4-40 X 0.312 INCH,PNH BRS | 83385 | OBD |
| -101 | 210-0406-00 | | | 1 | . . NUT,PLAIN,HEX.:4-40 X 0.188 INCH,BRS | 73743 | 2X12161-402 |
| | | | | | - - - * - - - | | |
| -102 | 214-1139-00[1] | | | 1 | . . SPRING,FLAT:GOLD COLORED | 80009 | 214-1139-00 |
| | 214-1139-02[1] | | | 1 | . . SPRING,FLAT:GREEN COLORED | 80009 | 214-1139-02 |
| | 214-1139-03[1] | | | 2 | . . SPRING,FLAT:RED COLORED | 80009 | 214-1139-03 |
| -103 | 214-1127-00 | | | 4 | . . ROLLER,DETENT:0.125 DIA X 0.125 INCH L | 80009 | 214-1127-00 |
| -104 | 105-0386-00[2] | | | 1 | . . ACTUATOR,CAM SW: | 80009 | 105-0386-00 |
| -105 | 401-0115-00 | | | 1 | . . BEARING,CAM SW:CENTER | 80009 | 401-0115-00 |
| | | | | | (ATTACHING PARTS) | | |
| | 211-0116-00 | | | 2 | . . SCR,ASSEM WSHR:4-40 X 0.312 INCH,PNH BRS | 83385 | OBD |
| | 210-0406-00 | | | 2 | . . NUT,PLAIN,HEX.:4-40 X 0.188 INCH,BRS | 73743 | 2X12161-402 |
| | | | | | - - - * - - - | | |
| -106 | 105-0387-00[2] | | | 1 | . . ACTUATOR,CAM SW: | 80009 | 105-0387-00 |
| | | | | | (ATTACHING PARTS FOR CKT BD) | | |
| -107 | 211-0116-00 | | | 10 | . SCR,ASSEM WSHR:4-40 X 0.312 INCH,PNH BRS | 83385 | OBD |
| | | | | | - - - * - - - | | |
| -108 | ----- ----- | | | 1 | . RESISTOR,VAR: | | |
| | | | | | (ATTACHING PARTS) | | |
| -109 | 210-0583-00 | | | 1 | . NUT,PLAIN,HEX.:0.25-32 X 0.312 INCH,BRS | 73743 | 2X20319-402 |
| -110 | 210-0046-00 | | | 1 | . WASHER,LOCK:INTL,0.26 ID X 0.40" OD,STL | 78189 | 1214-05-00-0541C |
| | | | | | - - - * - - - | | |
| -111 | 407-0803-00 | | | 1 | . BRKT,COMPONENT: | 80009 | 407-0803-00 |
| -112 | 260-0960-01 | | | 2 | . SWITCH,SLIDE:0.5A,120VDC,CKT BD MT | 10389 | 23-021-043 |
| -113 | ----- ----- | | | 1 | . CKT BOARD ASSY:SHIELD(SEE A9 EPL) | | |
| -114 | 131-0937-00 | | | 2 | . . TERMINAL,LUG: | 80009 | 131-0937-00 |
| -115 | 386-1556-00 | | | 1 | . . SPACER,CKT BD: | 80009 | 386-1556-00 |
| -116 | ----- ----- | | | 1 | . CKT BOARD ASSY:MAIN INTERFACE(SEE A1 EPL) | | |
| -117 | 131-0608-00 | | | 42 | . . CONTACT,ELEC:0.365 INCH LONG | 22526 | 47357 |
| | 131-0589-00 | | | 2 | . . CONTACT,ELEC:0.46 INCH LONG | 22526 | 47350 |
| | 131-0590-00 | | | 3 | . . CONTACT,ELEC:0.71 INCH LONG | 22526 | 47351 |
| | 131-0592-00 | | | 37 | . . CONTACT,ELEC:0.885 INCH LONG | 22526 | 47353 |
| -118 | 131-0595-00 | B010100 | B089999 | 10 | . . CONTACT,ELEC:1.37 INCH LONG | 22526 | 47355 |
| | 131-0595-00 | B090000 | | 7 | . . CONTACT,ELEC:1.37 INCH LONG | 22526 | 47355 |
| | 131-0665-00 | B090000 | | 1 | . . CONTACT,ELEC:0.88 INCH LONG | 22526 | 47358 |

[1]Replace only with part bearing the same color code as the original part in your instrument.
[2]7B53A only.

FIGURE 1 EXPLODED (cont)

| Fig. & Index No. | Tektronix Part No. | Serial/Model No. Eff | Dscont | Qty | 1 2 3 4 5 Name & Description | Mfr Code | Mfr Part Number |
|---|---|---|---|---|---|---|---|
| 1-119 | 131-0604-00 | | | 35 | . . CONTACT,ELEC:0.025 SQ X 0.365 INCH LONG | 80009 | 131-0604-00 |
| -120 | 136-0252-04 | B010100 | B113699 | 30 | . . CONTACT,ELEC:0.188 INCH LONG | 22526 | 75060 |
| | 136-0350-00 | B113700 | | 10 | . . SOCKET,PLUG-IN:3 PIN,LOW PROFILE | 80009 | 136-0350-00 |
| | 214-0579-00 | | | 2 | . . TERM.,TEST PT:0.40 INCH LONG | 80009 | 214-0579-00 |
| -121 | 129-0308-00 | | | 6 | . . POST,ELEC-MECH:HEX.,0.25 X 0.465 INCH LONG | 80009 | 129-0308-00 |
| | | | | | (ATTACHING PARTS FOR EACH) | | |
| -122 | 129-0339-00 | | | 1 | . . SPACER,POST: | 80009 | 129-0339-00 |
| | 211-0008-00 | | | 1 | . . SCREW,MACHINE:4-40 X 0.25 INCH,PNH STL | 83385 | OBD |
| | | | | | - - - * - - - | | |
| -123 | ----- ----- | | | 1 | . . RESISTOR,VAR:: | | |
| | | | | | (ATTACHING PARTS FOR CKD BD) | | |
| -124 | 211-0008-00 | | | 6 | SCREW,MACHINE:4-40 X 0.25 INCH,PNH STL | 83385 | OBD |
| | | | | | - - - * - - - | | |
| -125 | 220-0547-01 | | | 6 | NUT,BLOCK:0.38 X 0.25 X 0.282"OA | 80009 | 220-0547-01 |
| | | | | | (ATTACHING PARTS FOR EACH) | | |
| -126 | 211-0105-00 | | | 1 | SCREW,MACHINE:4-40 X 0.188"100 DEG,FLH STL | 83385 | OBD |
| | | | | | - - - * - - - | | |
| | ----- -----[1] | | | 1 | CKT BOARD ASSY:MAIN INTERFACE(SEE A1 EPL) | | |
| | 131-0595-00 | B010100 | B089999 | 8 | . CONTACT,ELEC:1.37 INCH LONG | 22526 | 47355 |
| | 131-0595-00 | B090000 | | 7 | . CONTACT,ELEC:1.37 INCH LONG | 22526 | 47355 |
| | 131-0665-00 | B090000 | | 1 | . CONTACT,ELEC:0.88 INCH LONG | 22526 | 47358 |
| | 131-0590-00 | | | 3 | . CONTACT,ELEC:0.71 INCH LONG | 22526 | 47351 |
| | 131-0589-00 | | | 2 | . CONTACT,ELEC:0.46 INCH LONG | 22526 | 47350 |
| | 131-0604-00 | | | 35 | . CONTACT,ELEC:0.025 SQ X 0.365 INCH LONG | 80009 | 131-0604-00 |
| | 131-0608-00 | | | 29 | . CONTACT,ELEC:0.365 INCH LONG | 22526 | 47357 |
| | 136-0252-04 | B010100 | B113699 | 30 | . CONTACT,ELEC:0.188 INCH LONG | 22526 | 75060 |
| | 136-0350-00 | B137000 | | 10 | . SOCKET,PLUG-IN:3 PIN,LOW PROFILE | 80009 | 136-0350-00 |
| | 214-0579-00 | | | 2 | . TERM.,TEST PT:0.40 INCH LONG | 80009 | 214-0579-00 |
| | 260-0960-01 | | | 1 | . SWITCH,SLIDE:0.5A,120VDC,CKT BD MT | 10389 | 23-021-043 |
| | 129-0308-00 | | | 6 | . POST,ELEC-MECH:HEX.,0.25 X 0.465 INCH LONG | 80009 | 129-0308-00 |
| | 129-0339-00 | | | 3 | . SPACER,POST: | 80009 | 129-0339-00 |
| | 376-0101-00 | | | 1 | . CPLG,SHAFT,RGD: | 80009 | 376-0101-00 |
| | 384-1120-00 | | | 1 | . EXTENSION SHAFT:10.0 L X 0.123 OD E POXY-GL | 80009 | 384-1120-00 |
| | ----- ----- | | | 1 | . RESISTOR,VAR: | | |
| | 210-0583-00 | | | 1 | . NUT,PLAIN,HEX.:0.25-32 X 0.312 INCH,BRS | 73743 | 2X20319-402 |
| | 210-0046-00 | | | 1 | . WASHER,LOCK:INTL,0.26 ID X 0.40" OD,STL | 78189 | 1214-05-00-0541C |
| | 407-0803-00[1] | | | 1 | . BRKT,COMPONENT: | 80009 | 407-0803-00 |
| | 105-0326-00[1] | | | 1 | . ACTR ASSY,CAMS: | 80009 | 105-0326-00 |
| -127 | 200-1310-00 | | | 1 | . . COVER,CAM SW: | 80009 | 200-1310-00 |
| | | | | | (ATTACHING PARTS) | | |
| -128 | 211-0008-00 | | | 6 | . . SCREW,MACHINE:4-40 X 0.25 INCH,PNH STL | 83385 | OBD |
| -129 | 210-0004-00 | | | 6 | . . WASHER,LOCK:INTL,0.12 ID X 0.26"OD,STL | 78189 | 1204-00-00-0541C |
| | | | | | - - - * - - - | | |
| -130 | 260-1309-00 | | | 1 | . . SWITCH,PUSH:4PDT: | 01963 | E63-10H |
| | | | | | (ATTACHING PARTS) | | |
| -131 | 211-0159-00 | | | 2 | . . SCREW,MACHINE:2-56 X 0.375 INCH,PNH STL | 83385 | OBD |
| -132 | 210-0850-00 | | | 2 | . . WASHER,FLAT:0.093 ID X 0.281 INCH OD | 12327 | OBD |
| -133 | 220-0619-00 | | | 1 | . . NUT,PLAIN,PLATE: | 80009 | 220-0619-00 |
| | | | | | - - - * - - - | | |
| -134 | 354-0391-00 | | | 2 | . . RING,RETAINING:0.395" FREE ID X 0.025" STL | 97464 | 3100-43-CD |
| -135 | 401-0081-02 | | | 2 | . . BEARING,CAM SW:FRONT | 80009 | 401-0081-02 |
| -136 | 214-1139-00[2] | | | - | . . SPRING,FLAT:GOLD COLORED | 80009 | 214-1139-00 |
| | 214-1139-02[2] | | | - | . . SPRING,FLAT:GREEN COLORED | 80009 | 214-1139-02 |
| | 214-1139-03[2] | | | - | . . SPRING,FLAT:RED COLORED | 80009 | 214-1139-03 |
| -137 | 214-1127-00 | | | 4 | . . ROLLER,DETENT:0.125 DIA X 0.125 INCH L | 80009 | 214-1127-00 |
| -138 | 105-0325-00[1] | | | 1 | . . ACTUATOR,CAM SW: | 80009 | 105-0325-00 |
| -139 | 401-0115-00 | | | 1 | . . BEARING,CAM SW:CENTER | 80009 | 401-0115-00 |
| -140 | 105-0324-00[1] | | | 1 | . . ACTUATOR,CAM SW: | 80009 | 105-0324-00 |
| -141 | 210-0406-00 | | | 11 | . . NUT,PLAIN,HEX.:4-40 X 0.188 INCH,BRS | 73743 | 2X12161-402 |
| -142 | 131-0963-00 | | | 1 | . . CONTACT,ELEC:GROUNDING | 80009 | 131-0963-00 |
| | | | | | (ATTACHING PARTS FOR ACTR ASSY) | | |
| -143 | 211-0116-00 | | | 6 | . SCR,ASSEM WSHR:4-40 X 0.312 INCH,PNH BRS | 83385 | OBD |
| -144 | 214-1597-00 | | | 1 | ACTUATOR,SWITCH:SPOOL SHAPE | 80009 | 214-1597-00 |
| -145 | 384-1059-00 | | | 1 | EXTENSION SHAFT:6.58 INCH LONG | 80009 | 384-1059-00 |
| -146 | 384-1087-00 | | | 1 | SHAFT,PUSH,ACTR: | 80009 | 384-1087-00 |
| -147 | 384-1101-00 | | | 1 | EXTENSION SHAFT:4.14 INCH LONG | 80009 | 384-1101-00 |
| | | | | | - - - * - - - | | |

[1] 7B53AN only.

[2] Replace only with part bearing the same color code as the original part in your instrument.

FIGURE 1 EXPLODED (cont)

| Fig. & Index No. | Tektronix Part No. | Serial/Model No. Eff | Dscont | Qty | 1 2 3 4 5 Name & Description | Mfr Code | Mfr Part Number |
|---|---|---|---|---|---|---|---|
| 1-148 | 386-1402-00 | | | 1 | PANEL,REAR: | 80009 | 386-1402-00 |
| | | | | | (ATTACHING PARTS) | | |
| -149 | 213-0192-00 | | | 4 | SCR,TPG,THD FOR:6-32 X 0.50 INCH,PNH STL | 87308 | OBD |
| -150 | 361-0326-00 | | | 1 | SPACER,SLEEVE:0.18 ID X 0.25 OD X 0.10"L | 80009 | 361-0326-00 |
| | | | | | - - - * - - - | | |
| -151 | 214-1061-00 | | | 1 | SPRING,GROUND:FLAT | 80009 | 214-1061-00 |
| -152 | 426-0505-11 | | | 1 | FR SECT,PLUG-IN:TOP | 80009 | 426-0505-11 |
| -153 | 426-0499-11 | | | 1 | FR SECT,PLUG IN:BOTTOM | 80009 | 426-0499-11 |
| -154 | 131-0707-00 | | | 75 | CONTACT,ELEC:0.48"L,22-26 AWG WIRE | 22526 | 47439 |
| | 131-0708-00 | | | 6 | CONTACT,ELEC:0.48"L,28-32 AWG WIRE | 22526 | 47437 |
| -155 | 131-0621-00 | | | 4 | CONTACT,ELEC:0.577"L,22-26 AWG WIRE | 22526 | 46231 |
| | 131-0622-00 | | | 2 | CONTACT,ELEC:0.577"L,28-32 AWG WIRE | 22526 | 46241 |
| | 131-0792-00 | | | 2 | CONTACT ELEC:0.577" L,18-20 AWG WIRE | 22526 | 46221 |
| -156 | 352-0169-00 | | | 8 | CONN BODY,PL,EL:2 WIRE BLACK | 80009 | 352-0169-00 |
| | 352-0169-01 | | | 1 | CONN BODY,PL,EL:2 WIRE BROWN | 80009 | 352-0169-01 |
| -157 | 352-0198-00 | | | 3 | CONN BODY,PL,EL:2 WIRE BLACK | 80009 | 352-0198-00 |
| -158 | 352-0161-00 | | | 2 | CONN BODY,PL,EL:3 WIRE BLACK | 80009 | 352-0161-00 |
| | 352-0161-02 | | | 1 | CONN BODY,PL,EL:3 WIRE RED | 80009 | 352-0161-02 |
| -159 | 352-0162-00 | | | 2 | CONN BODY,PL,EL:4 WIRE BLACK | 80009 | 352-0162-00 |
| -160 | 352-0163-00 | | | 3 | CONN BODY,PL,EL:5 WIRE BLACK | 80009 | 352-0163-00 |
| -161 | 352-0164-00 | | | 4 | CONN BODY,PL,EL:6 WIRE BLACK | 80009 | 352-0164-00 |
| -162 | 352-0166-00 | | | 1 | CONN BODY,PL,EL:8 WIRE BLACK | 80009 | 352-0166-00 |
| -163 | 175-0825-00 | | | IN | WIRE,ELECTRICAL0.833 FT 2 WIRE RIBBON | 23499 | TEK-175-0825-00 |
| -164 | 175-0826-00 | | | IN | WIRE,ELECTRICAL:3 WIRE RIBBON | 08261 | TEK-175-0826-00 |
| -165 | 175-0827-00 | | | IN | WIRE,ELECTRICAL:4 WIRE RIBBON | 08261 | TEK-175-0827-00 |
| -166 | 175-0828-00 | | | IN | WIRE,ELECTRICAL2.833 FT 5 WIRE RIBBON | 23499 | TEK-175-0828-00 |
| -167 | 175-0829-00 | | | IN | WIRE,ELECTRICAL0.585 FT 6 WIRE RIBBON | 83501 | TEK-175-0829-00 |
| -168 | 175-0831-00 | | | IN | WIRE,ELECTRICAL:8 WIRE RIBBON | 08261 | TEK-175-0831-00 |

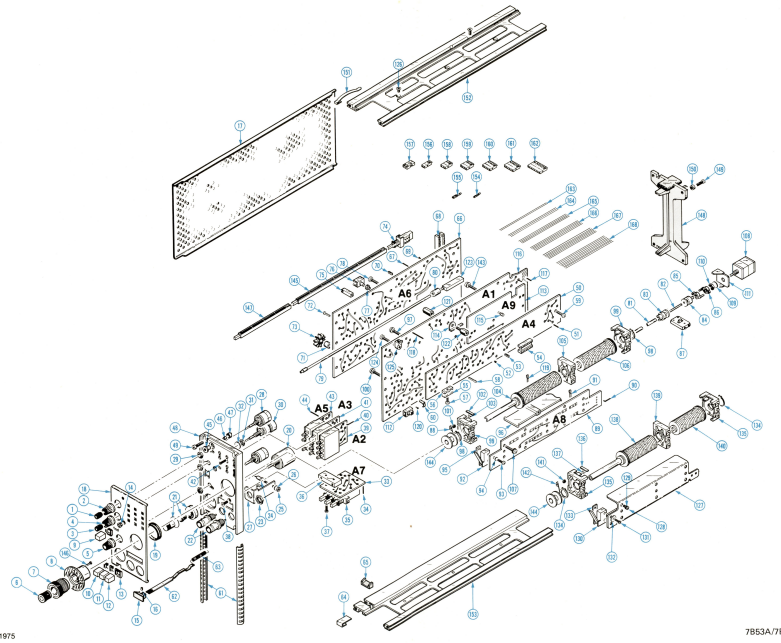
A1
A2
A3
A4
A5
A6
A7
A8
A9

| Fig. & Index No. | Tektronix Part No. | Serial/Model No. Eff | Dscont | Qty | 1 2 3 4 5 | Name & Description | Mfr Code | Mfr Part Number |
|---|---|---|---|---|---|---|---|---|
| | 070-1252-00 | | | 1 | | MANUAL,TECH:OPERATOR'S | 80009 | 070-1252-00 |
| | 070-1342-00 | | | 1 | | MANUAL,TECH:INSTRUCTION | 80009 | 070-1342-00 |

## MANUAL CHANGE INFORMATION

At Tektronix, we continually strive to keep up with latest electronic developments by adding circuit and component improvements to our instruments as soon as they are developed and tested.

Sometimes, due to printing and shipping requirements, we can't get these changes immediately into printed manuals. Hence, your manual may contain new change information on following pages.

A single change may affect several sections. Since the change information sheets are carried in the manual until all changes are permanently entered, some duplication may occur. If no such change pages appear following this page, your manual is correct as printed.

## SERVICE NOTE

Because of the universal parts procurement problem, some electrical parts in your instrument may be different from those described in the Replaceable Electrical Parts List. The parts used will in no way alter or compromise the performance or reliability of this instrument. They are installed when necessary to ensure prompt delivery to the customer. Order replacement parts from the Replaceable Electrical Parts List.

# CALIBRATION TEST EQUIPMENT REPLACEMENT

**Calibration Test Equipment Chart**

This chart compares TM 500 product performance to that of older Tektronix equipment. Only those characteristics where significant specification differences occur, are listed. In some cases the new instrument may not be a total functional replacement. Additional support instrumentation may be needed or a change in calibration procedure may be necessary.

**Comparison of Main Characteristics**

| | | |
|---|---|---|
| DM 501 replaces 7D13 | | |
| PG 501 replaces 107 | PG 501 - Risetime less than 3.5 ns into 50 Ω. | 107 - Risetime less than 3.0 ns into 50 Ω. |
| 108 | PG 501 - 5 V output pulse; 3.5 ns Risetime. | 108 - 10 V output pulse; 1 ns Risetime. |
| 111 | PG 501 - Risetime less than 3.5 ns; 8 ns Pretrigger pulse delay. | 111 - Risetime 0.5 ns; 30 to 250 ns Pretrigger Pulse delay. |
| 114 | PG 501 - ±5 V output. | 114 - ±10 V output. Short proof output. |
| 115 | PG 501 - Does not have Paired, Burst, Gated, or Delayed pulse mode; ±5 V dc Offset. Has ±5 V output. | 115 - Paired, Burst, Gated, and Delayed pulse mode; ±10 V output. Short-proof output. |
| PG 502 replaces 107 | | |
| 108 | PG 502 - 5 V output | 108 - 10 V output. |
| 111 | PG 502 - Risetime less than 1 ns; 10 ns Pretrigger pulse delay. | 111 - Risetime 0.5 ns; 30 to 250 ns Pretrigger pulse delay. |
| 114 | PG 502 - ±5 V output | 114 - ±10 V output. Short proof output. |
| 115 | PG 502 - Does not have Paired, Burst, Gated, Delayed & Undelayed pulse mode; Has ±5 V output. | 115 - Paired, Burst, Gated, Delayed & Undelayed pulse mode; ±10 V output. Short-proof output. |
| 2101 | PG 502 - Does not have Paired or Delayed pulse. Has ±5 V output. | 2101 - Paired and Delayed pulse; 10 V output. |
| PG 506 replaces 106 | PG 506 - Positive-going trigger output signal at least 1 V; High Amplitude output, 60 V. | 106 - Positive and Negative-going trigger output signal, 50 ns and 1 V; High Amplitude output, 100 V. |
| 067-0502-01 | PG 506 - Does not have chopped feature. | 0502-01 - Comparator output can be alternately chopped to a reference voltage. |
| SG 503 replaces 190, 190A, 190B | SG 503 - Amplitude range 5 mV to 5.5 V p-p. | 190B - Amplitude range 40 mV to 10 V p-p. |
| 191 | SG 503 - Frequency range 250 kHz to 250 MHz. | 191 - Frequency range 350 kHz to 100 MHz. |
| 067-0532-01 | SG 503 - Frequency range 250 kHz to 250 MHz. | 0532-01 - Frequency range 65 MHz to 500 MHz. |
| TG 501 replaces 180, 180A | TG 501 - Marker outputs, 5 sec to 1 ns. Sinewave available at 5, 2, and 1 ns. Trigger output - slaved to marker output from 5 sec through 100 ns. One time-mark can be generated at a time. | 180A - Marker outputs, 5 sec to 1 μs. Sinewave available at 20, 10, and 2 ns. Trigger pulses 1, 10, 100 Hz; 1, 10, and 100 kHz. Multiple time-marks can be generated simultaneously. |
| 181 | TG 501 - Marker outputs, 5 sec to 1 ns. Sinewave available at 5, 2, and 1 ns. | 181 - Marker outputs, 1, 10, 100, 1000, and 10,000 μs, plus 10 ns sinewave. |
| 184 | TG 501 - Marker outputs, 5 sec to 1 ns. Sinewave available at 5, 2, and 1 ns. Trigger output - slaved to marker output from 5 sec through 100 ns. One time-mark can be generated at a time. | 184 - Marker outputs, 5 sec to 2 ns. Sinewave available at 50, 20, 10, 5, and 2 ns. Separate trigger pulses of 1 and .1 sec; 10, 1, and .1 ms; 10 and 1 μs. Marker amplifier provides positive or negative time marks of 25 V min. Marker intervals of 1 and .1 sec; 10, 1, and .1 ms; 10 and 1 μs. |
| 2901 | TG 501 - Marker outputs, 5 sec to 1 ns. Sinewave available at 5, 2, and 1 ns. Trigger output - slaved to marker output from 5 sec through 100 ns. One time-mark can be generated at a time. | 2901 - Marker outputs, 5 sec to 0.1 μs. Sinewave available to 50, 10, and 5 ns. Separate trigger pulses, from 5 sec to 0.1 μs. Multiple time-marks can be generated simultaneously. |

**NOTE: All TM 500 generator outputs are short-proof. All TM 500 plug-in instruments require TM 500-Series Power Module.**

REV. A, OCT 1975